Modular Jack & Plug

Connectors

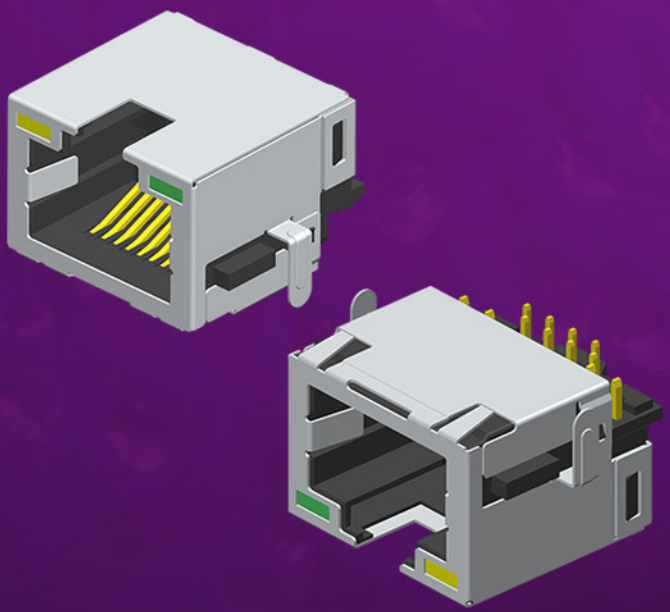

www.amtek-co.com.tw

3D Interactive Catalogue online

M odular Jack & Plug

Modular

Jack & Plug

8-01 ~ 8-09 • **Modular Plug**

8-11 ~ 8-32 • **Modular Jack**

8-35 ~ 8-44 • **SFP+ Series**

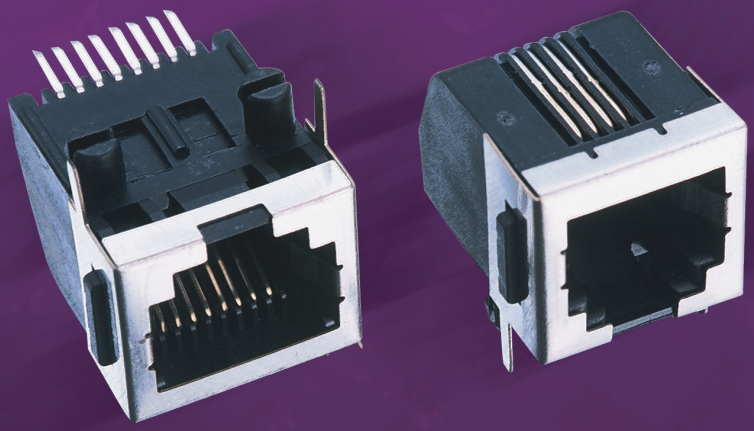

AMTEK CONNECTORS MANUFACTURER

MODULAR PLUG

8-1 Modular Plug Short Body 4 Position

8-1 Modular Plug Short Body 6 Position

8-2 Modular Plug Long Body 6 Position UK Type

8-2 Modular Plug Long Body 8 Position Cat.5E

NEW 8-3 Modular Plug Long Body 8 Position with Special Boot Cat.6A

8-3 Modular Plug Long Body 8 Position Cat.6 Pass Through

NEW 8-4 Modular Plug Long Body 8 Position with Arc Latch Cat.6 Pass Through

8-5 Modular Plug Shielded Short Body 6 Position Offset Latch

8-5 Modular Plug Shielded Short Body 8 Position with Boot Cat.5e

8-6 Modular Plug Shielded Short Body 8 Position with Boot Cat.6A

NEW 8-6 Modular Plug Shielded 2 Rows Short Body 8 Position with Boot Cat.6A

8-7 Modular Plug Shielded Long Body 4 Position With 2 latches

8-7 Modular Plug Shielded Long Body 6 Position

NEW 8-8 Modular Plug Shielded Long Body 8 Position with Hook Cat.6A

8-8 Modular Plug Shielded Long Body 8 Position Cat.5E Pass Through

8-9 Modular Plug Shielded Long Body 8 Position

8-9 Modular Plug Shielded Long Body 10 Position

Modular Plug Short Body 4 Position

Specifications
Current Rating: 1.5 AMP
Insulation Resistance: 500mΩ Min.
Contact Resistance: 30mΩ Max.
Dielectric Voltage: 1000V AC for one minute
Operating Temperature: -40°C to +85°C

Material
Insulator: PC, UL94V-2
Contact Pin: Brass

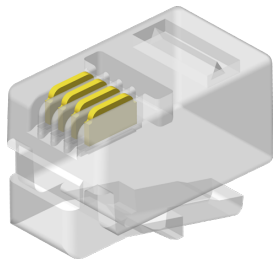

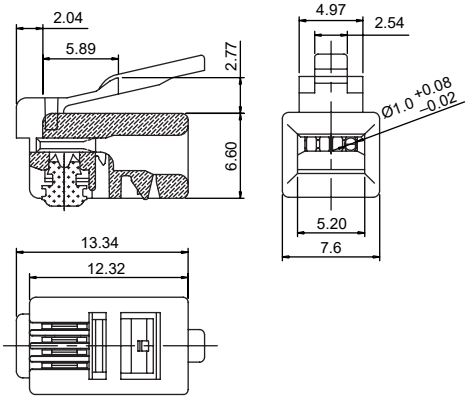

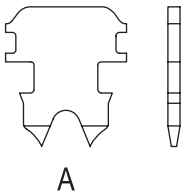

ORDER INFORMATION

5 R P H - 4 4 S A A T L B - 401 - S 1

- H: W/O Shielded+short body+Flat oval cable
- 4: Number of Positions — 4:4 Positions
- 4: Number of Contacts — 4:4 Contacts
- SA: SA:Selective Au 6u"
- A: A:2 Prong for Stranded Conductor
- T: T:Transparent
- L: L:RoHS + PC
- B: B:Bag Package
- 401: Series No.

Modular Plug Short Body 6 Position

Specifications
Current Rating: 1.5 AMP
Insulation Resistance: 500mΩ Min.
Contact Resistance: 30mΩ Max.
Dielectric Voltage: 1000V AC for one minute
Operating Temperature: -40°C to +85°C

Material
Insulator: PC, UL94V-2
Contact Pin: Brass

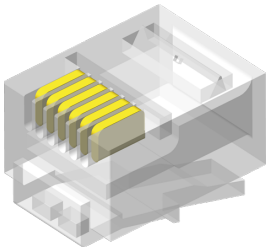

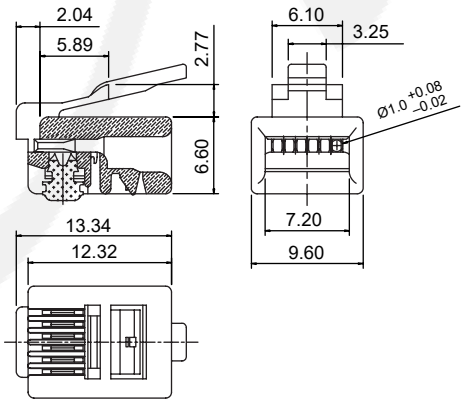

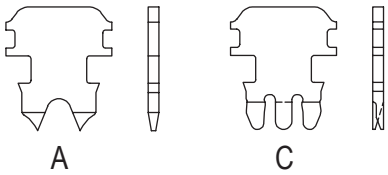

ORDER INFORMATION

5 R P H - 6 6 S 0 X T L B - 601 - S 1

- H: W/O Shielded+short body+Flat oval cable
- 6: Number of Positions — 6:6 Positions
- 6: Number of Contacts — 6:6 Contacts
- S0: S0:Selective Au
- X: A:2 Prong for Stranded Conductor / C:3 Prong for Stranded & Solid Conductor
- T: T:Transparent
- L: L:RoHS + PC
- B: B:Bag Package
- 601: Series No.

Modular Plug Long Body 6 Position UK Type

Specifications
Current Rating: 1.5 AMP
Insulation Resistance: 500mΩ Min.
Contact Resistance:20mΩ Max.
Dielectric Voltage: 1000V AC for one minute
Operating Temperature: -10°C to +60°C

Material
Housing: PC, UL94V-0 or PC, UL94V-2
Terminal: Brass

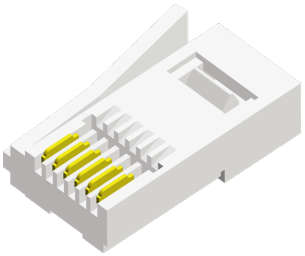

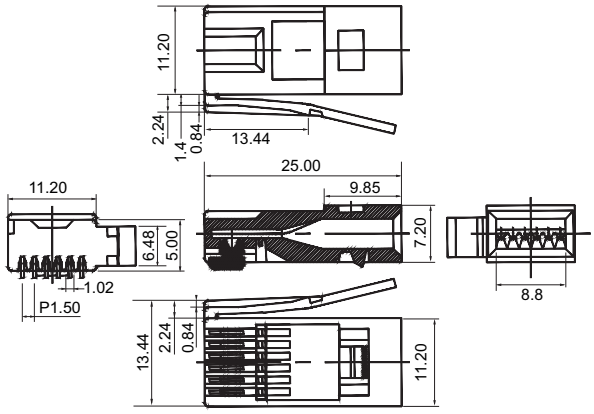

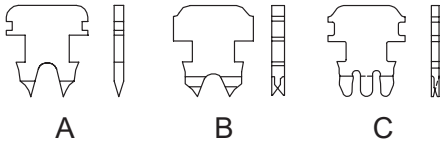

ORDER INFORMATION

5	R	P	B	-	6	6	X	X	X	T	L	B	-	001	-	S	X

- B:Stainless Steel, Long Body, Flat Cable
- Number of Positions: 6:6 Positions
- Number of Contacts: 6:6 Contacts
- S0:Selective Au / GA:Au 6u" / GF:Au 15u" / GD:Au 30u" / GH:Au 50u"
- A:2 Prong for Stranded Conductor / B:2 Prong for Stranded & Solid Conductor / C:3 Prong for Stranded & Solid Conductor
- T:Transparent
- L:RoHS + PC
- B:Bag Package
- Series No.: 001
- 1:UL 94V-0 / 2:UL 94V-2

Modular Plug Long Body 8 Position Cat.5E

Specifications
Current Rating: 1.5 AMP
Insulation Resistance: 500mΩ Min.
Contact Resistance:20mΩ Max.
Dielectric Voltage: 1000V AC for one minute
Operating Temperature: -10°C to +60°C

Material
Housing: PC, UL94V-0 or PC, UL94V-2
Terminal: Brass

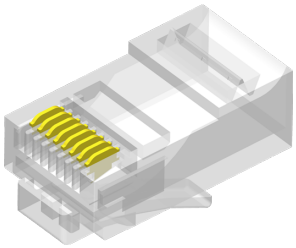

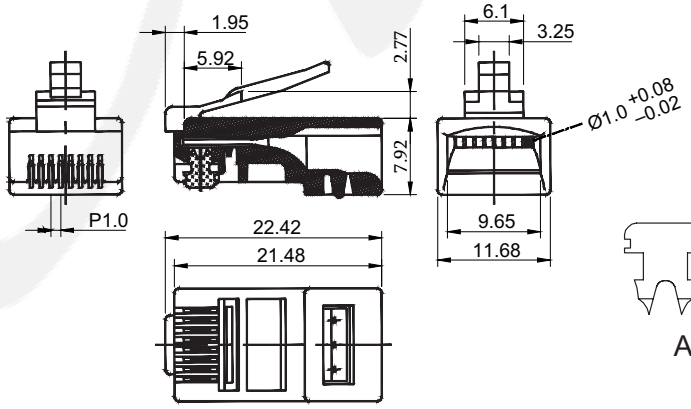

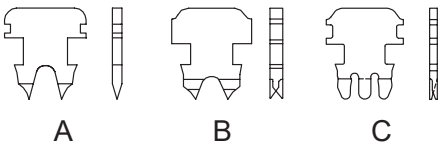

ORDER INFORMATION

5	R	P	E	-	8	8	X	X	X	T	L	B	-	007	-	S	X

- E:W/O Shielded, Long Body, Round Cable
- Number of Positions: 8:8 Positions
- Number of Contacts: 8:8 Contacts
- S0:Selective Au / GA:Au 6u" / GF:Au 15u" / GD:Au 30u" / GH:Au 50u"
- A:2 Prong for Stranded Conductor / B:2 Prong for Stranded & Solid Conductor / C:3 Prong for Stranded & Solid Conductor
- T:Transparent
- L:RoHS + PC
- B:Bag Package
- Series No.: 007
- 1:UL 94V-0 / 2:UL 94V-2

Modular Plug Long Body 8 Position with Special Boot Cat.6A

Specifications
Current Rating: 1.5 AMP
Insulation Resistance: 500mΩ Min.
Contact Resistance: 20mΩ Max.
Dielectric Voltage: 1000V AC for one minute
Operating Temperature: -10°C to +60°C

Material
Housing: PC, UL94V-0 or PC, UL94V-2
Terminal: Brass

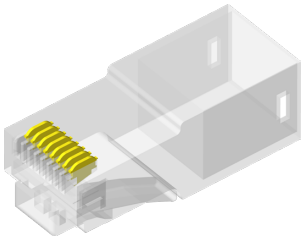

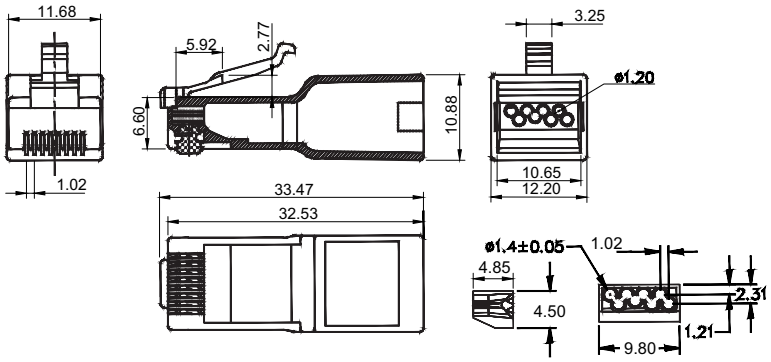

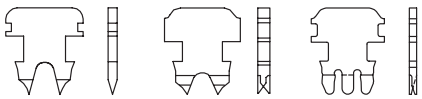

ORDER INFORMATION

5 R P F - 8 8 X X X T L B - 054 - S X

- F: W/O Shielded+long body+Flat oval cable
- 8: Number of Positions, 8:8 Positions
- 8: Number of Contacts, 8:8 Contacts
- XX: S0:Selective Au; GA:Au 6u"; GF:Au 15u"; GD:Au 30u"; GH:Au 50u"
- X: A:2 Prong for Stranded Conductor; B:2 Prong for Stranded & Solid Conductor; C:3 Prong for Stranded & Solid Conductor
- T: T:Transparent
- L: L:RoHS + PC
- B: B:Bag Package
- 054: Series No.
- X: 1:UL 94V-0; 2:UL 94V-2

Modular Plug Long Body 8 Position Cat.6 Pass Through

Specifications
Current Rating: 1.5 AMP
Insulation Resistance: 500mΩ Min.
Contact Resistance: 20mΩ Max.
Dielectric Voltage: 1000V AC for one minute
Operating Temperature: -10°C to +60°C

Material
Housing: PC, UL94V-0 or PC, UL94V-2
Terminal: Brass

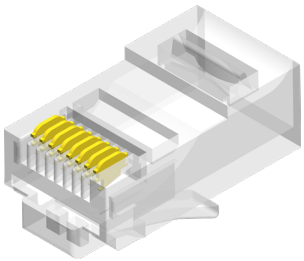

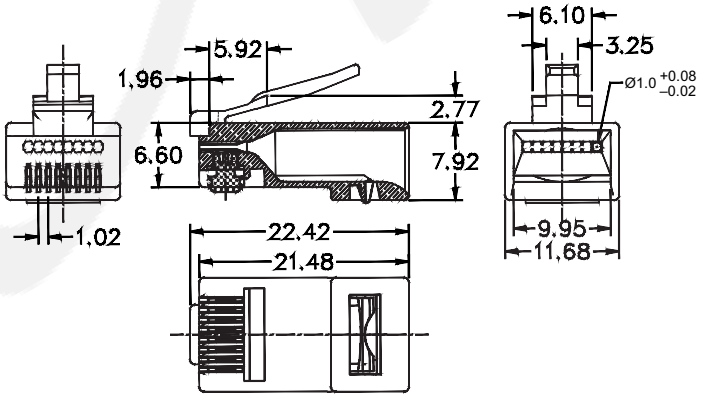

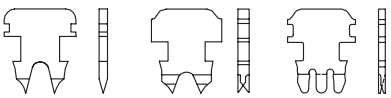

ORDER INFORMATION

5 R P E - 8 8 X X X T L B - 007 - S X

- E: W/O Shielded+long body+Round cable
- 8: Number of Positions, 8:8 Positions
- 8: Number of Contacts, 8:8 Contacts
- XX: S0:Selective Au; GA:Au 6u"; GF:Au 15u"; GD:Au 30u"; GH:Au 50u"
- X: A:2 Prong for Stranded Conductor; B:2 Prong for Stranded & Solid Conductor; C:3 Prong for Stranded & Solid Conductor
- T: T:Transparent
- L: L:RoHS + PC
- B: B:Bag Package
- 007: Series No.
- X: 3:UL 94V-0; 4:UL 94V-2

RoHS

Modular Plug Long Body 8 Position with Arc Latch Cat.6 Pass Through

Specifications
Current Rating: 1.5 AMP
Insulation Resistance: 500mΩ Min.
Contact Resistance: 20mΩ Max.
Dielectric Voltage: 1000V AC for one minute
Operating Temperature: -10°C to +60°C

Material
Housing: PC, UL94V-0 or PC, UL94V-2
Terminal: Brass

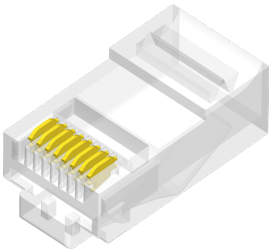

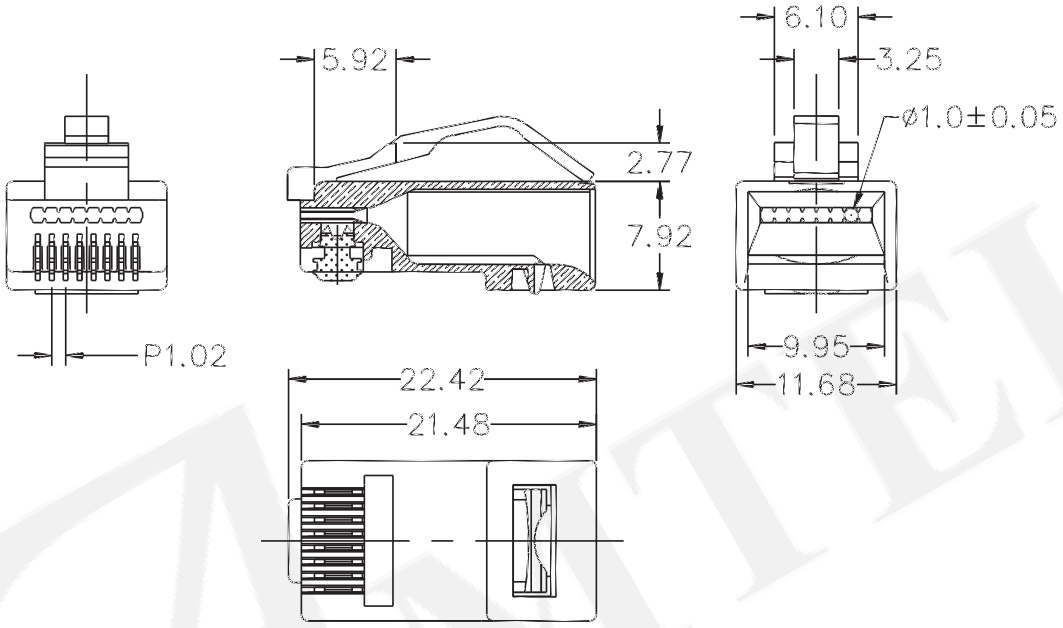

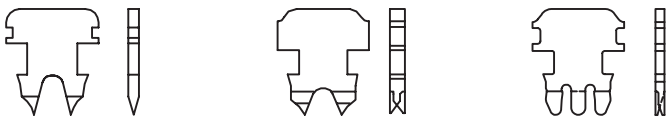

ORDER INFORMATION

5	R	P	E	-	8	8	X	X	X	T	L	B	-	029	-	S	X

- E: W/O Shielded+long body+Round cable
- Number of Positions: 8: 8 Positions
- Number of Contacts: 8: 8 Contacts
- S0: Selective Au; GA: Au 6u"; GF: Au 15u"; GD: Au 30u"; GH: Au 50u"
- A: 2 Prong for Stranded Conductor; B: 2 Prong for Stranded & Solid Conductor; C: 3 Prong for Stranded & Solid Conductor
- T: Transparent
- L: RoHS + PC
- B: Bag Package
- Series No.
- 1: UL 94V-0; 2: UL 94V-2

Modular Plug Shielded Short Body 6 Position Offset Latch

Specifications
Current Rating: 1.5 AMP
Insulation Resistance: 500mΩ Min.
Contact Resistance:20mΩ Max.
Dielectric Voltage: 1000V AC for one minute
Operating Temperature: -10°C to +60°C

Material
Housing: PC, UL94V-2 or PC, UL94V-0
Terminal: Brass

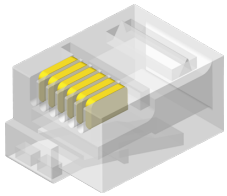

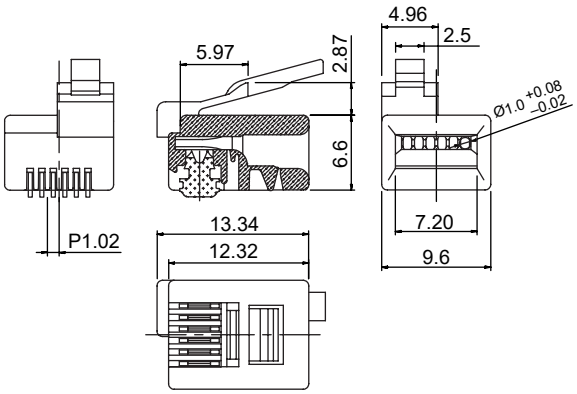

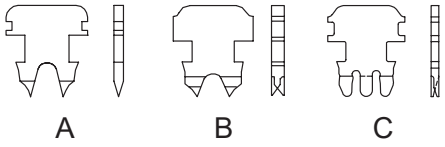

ORDER INFORMATION

5 R P H - 6 6 X X X T L B - D51 - S X

- H: W/O Shell, Short Body, Flat Cable
- Number of Positions: 6:6 Positions
- Number of Contacts: 6:6 Contacts
- S0:Selective Au; GA:Au 6u"; GF:Au 15u"; GD:Au 30u"; GH:Au 50u"
- A:2 Prong for Stranded Conductor; B:2 Prong for Stranded & Solid Conductor; C:3 Prong for Stranded & Solid Conductor
- T:Transparent
- L:RoHS + PC
- B:Bag Package
- Series No.: D51
- 1:UL 94V-0; 2:UL 94V-2

Modular Plug Shielded Short Body 8 Position with Boot Cat.5e

Specifications
Current Rating: 1.5 AMP
Insulation Resistance: 500mΩ Min.
Contact Resistance: 20mΩ Max.
Dielectric Voltage: 1000V AC for one minute
Operating Temperature: -10°C to +60°C

Material
Housing: PC, UL94V-0 or PC, UL94V-2
Shell: Stainless Steel
Terminal: Brass

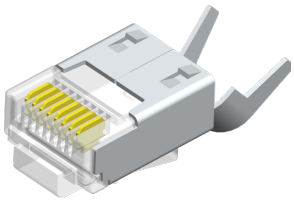

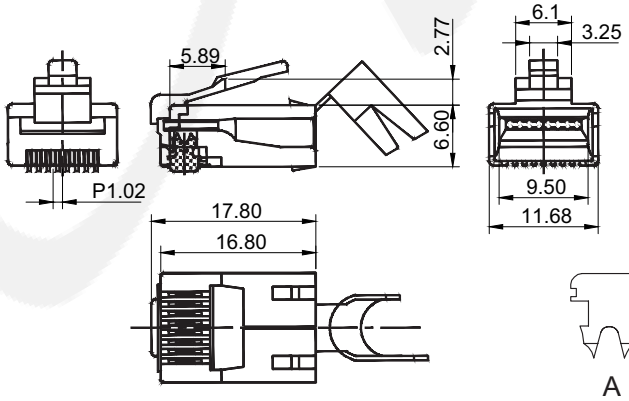

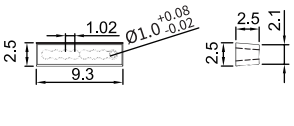

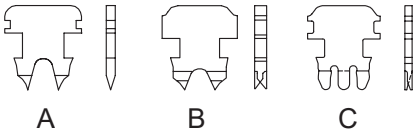

ORDER INFORMATION

5 R P D - 8 8 X X X T L B - M04 - S X

- D: With Shielded+short body+Flat oval cable
- Number of Positions: 8:8 Positions
- Number of Contacts: 8:8 Contacts
- S0:Selective Au; GA:Au 6u"; GF:Au 15u"; GD:Au 30u"; GH:Au 50u"
- A:2 Prong for Stranded Conductor; B:2 Prong for Stranded & Solid Conductor; C:3 Prong for Stranded & Solid Conductor
- T:Transparent
- L:RoHS + PC
- B:Bag Package
- Series No.: M04
- 1:UL 94V-0; 2:UL 94V-2

Modular Plug Shielded Short Body 8 Position with Boot Cat.6A

Specifications
Current Rating: 1.5 AMP
Insulation Resistance: 500mΩ Min.
Contact Resistance: 20mΩ Max.
Dielectric Voltage: 1000V AC for one minute
Operating Temperature: -10°C to +60°C

Material
Housing: PC, UL94V-0 or PC, UL94V-2
Shell: Stainless Steel
Terminal: Brass

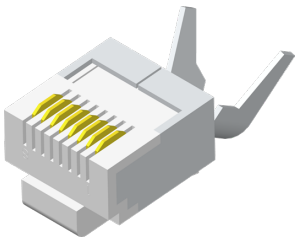

ORDER INFORMATION

5 R P D - 8 8 X X X T L B - S88 - S X

- D: With Shielded+short body+Flat oval cable
- Number of Positions: 8:8 Positions
- Number of Contacts: 8:8 Contacts
- S0:Selective Au / GA:Au 6u" / GF:Au 15u" / GD:Au 30u" / GH:Au 50u"
- A:2 Prong for Stranded Conductor / B:2 Prong for Stranded & Solid Conductor / C:3 Prong for Stranded & Solid Conductor
- T:Transparent
- L:RoHS + PC
- B:Bag Package
- Series No.: S88
- 1:UL 94V-0 / 2:UL 94V-2

Modular Plug Shielded 2 Rows Short Body 8 Position with Boot Cat.6A

Specifications
Current Rating: 1.5 AMP
Insulation Resistance: 500mΩ Min.
Contact Resistance: 20mΩ Max.
Dielectric Voltage: 1000V AC for one minute
Operating Temperature: -10°C to +60°C

Material
Housing: PC, UL94V-0 or PC, UL94V-2
Shell: Stainless Steel
Terminal: Brass

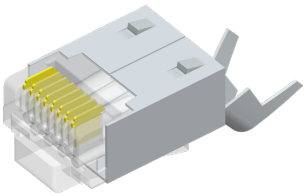

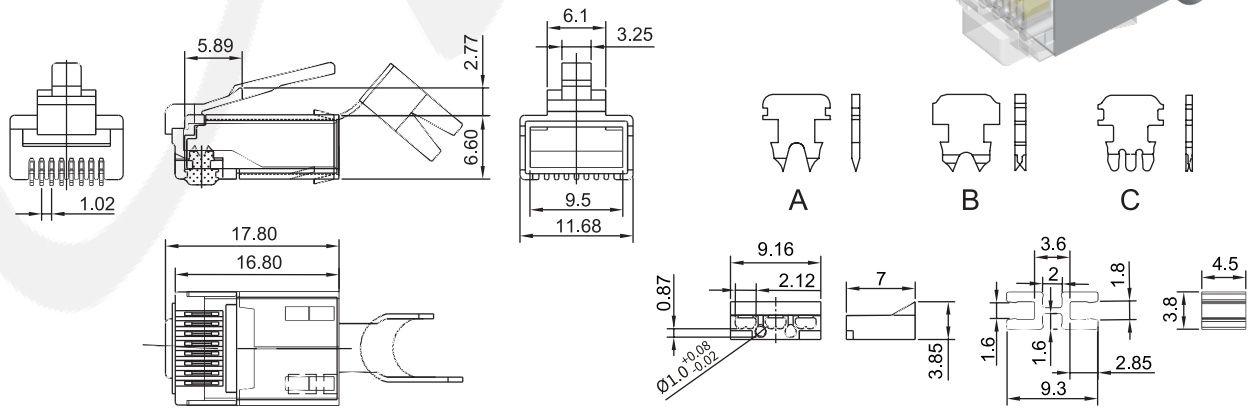

ORDER INFORMATION

5 R P D - 8 8 X X X T L B - M15 - S X

- D: With Shielded+short body+Flat oval cable
- Number of Positions: 8:8 Positions
- Number of Contacts: 8:8 Contacts
- S0:Selective Au / GA:Au 6u" / GF:Au 15u" / GD:Au 30u" / GH:Au 50u"
- A:2 Prong for Stranded Conductor / B:2 Prong for Stranded & Solid Conductor / C:3 Prong for Stranded & Solid Conductor
- T:Transparent
- L:RoHS + PC
- B:Bag Package
- Series No.: M15
- 1:UL 94V-0 / 2:UL 94V-2

Modular Plug Shielded Long Body 4 Position With 2 latches

Specifications
Current Rating: 1.5 AMP
Insulation Resistance: 500mΩ Min.
Contact Resistance: 20mΩ Max.
Dielectric Voltage: 1000V AC for one minute
Operating Temperature: -10°C to +60°C

Material
Housing: PC, UL94V-0 or PC, UL94V-2
Shell: Stainless Steel

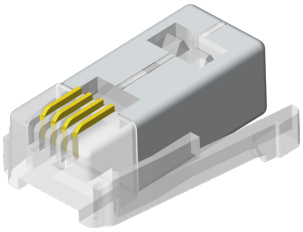

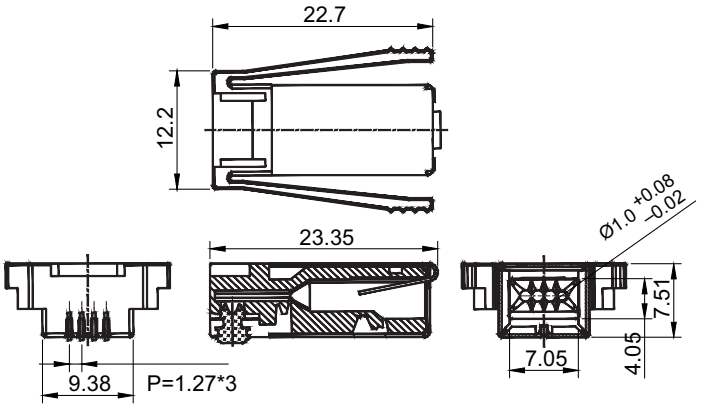

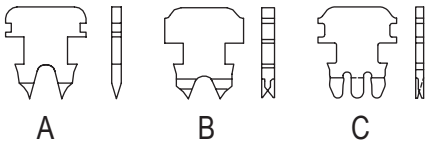

ORDER INFORMATION

5	R	P	B	-	4	4	X	X	X	T	L	B	-	011	-	S	X

- B:With Shell, Long Board, Flat Cable
- Number of Contacts: 4:4 Contacts
- S0:Selective Au; GA:Gold 6u"; GF:Gold 15u"; GD:Gold 30u"; GH:Gold 50u"
- A:2 Prong for Stranded Conductor; B:2 Prong for Stranded & Solid Conductor; C:3 Prong for Stranded & Solid Conductor
- T:Transparent
- L:RoHS + PC
- B:Bag Package
- Series No.
- 1:UL94V-0; 2:UL94V-2

Modular Plug Shielded Long Body 6 Position

Specifications
Current Rating: 1.5 AMP
Insulation Resistance: 500mΩ Min.
Contact Resistance: 30mΩ Max.
Dielectric Voltage: 1000V AC for one minute
Operating Temperature: -40°C to +85°C

Material
Insulator: PC, UL94V-2
Contact Pin: Brass

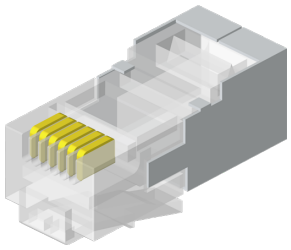

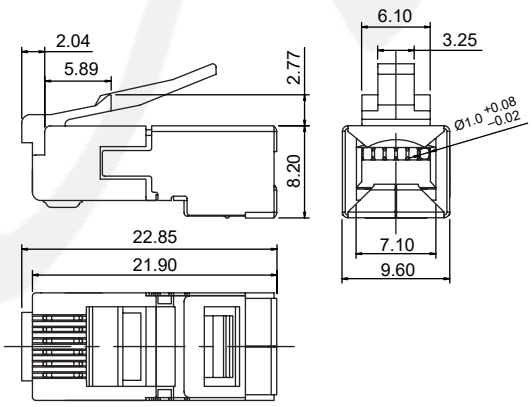

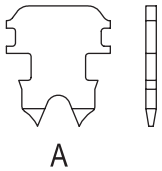

ORDER INFORMATION

5	R	P	A	-	6	6	S	0	A	T	L	B	-	L71	-	S	1

- A:With Shielded, Long Body, Round Cable
- Number of Positions: 6:6 Positions
- Number of Contacts: 6:6 Contacts
- S0:Selective Au
- A:2 Prong for Stranded Conductor
- T:Transparent
- L:RoHS + PC
- B:Bag Package
- Series No.

Modular Plug Shielded Long Body 8 Position with Hook Cat.6A

Specifications
Current Rating: 1.5 AMP
Insulation Resistance: 500mΩ Min.
Contact Resistance: 20mΩ Max.
Dielectric Voltage: 1000V AC for one minute
Operating Temperature: -10°C to +60°C

Material
Housing: PC, UL94V-0 or PC, UL94V-2
Shell: Stainless Steel
Terminal: Brass

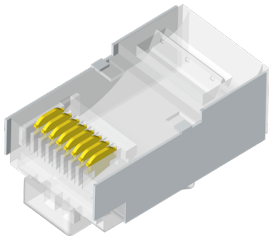

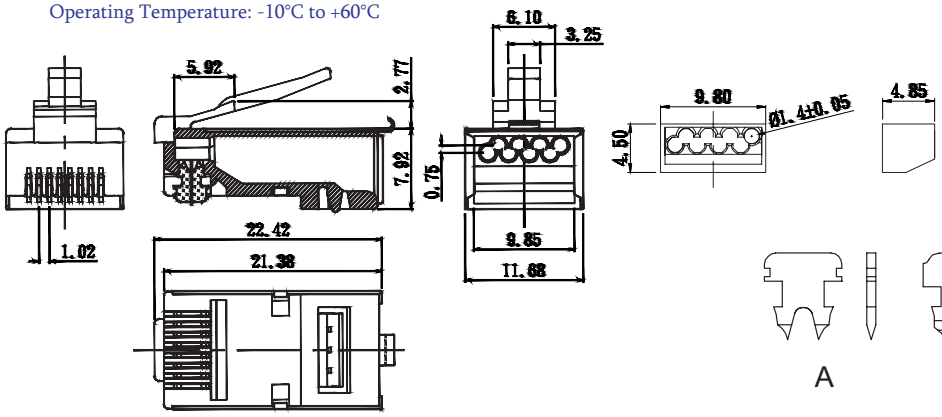

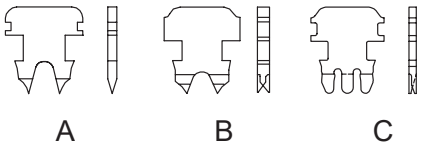

ORDER INFORMATION

5	R	P	B	-	8	8	X	X	X	T	L	B	-	002	-	S	X

- B: Stainless Steel, Long Body, Flat Cable
- Number of Positions: 8: 8 Positions
- Number of Contacts: 8: 8 Contacts
- S0: Selective Au; GA: Au 6u"; GF: Au 15u"; GD: Au 30u"; GH: Au 50u"
- A: 2 Prong for Stranded Conductor; B: 2 Prong for Stranded & Solid Conductor; C: 3 Prong for Stranded & Solid Conductor
- T: Transparent
- L: RoHS + PC
- B: Bag Package
- 002: Series No.
- S
- X: 1: UL 94V-0; 2: UL 94V-2

Modular Plug Shielded Long Body 8 Position Cat.5E Pass Through

Specifications
Current Rating: 1.5 AMP
Insulation Resistance: 500mΩ Min.
Contact Resistance: 20mΩ Max.
Dielectric Voltage: 1000V AC for one minute
Operating Temperature: -10°C to +60°C

Material
Housing: PC, UL94V-0 or PC, UL94V-2
Shell: Stainless Steel
Terminal: Brass

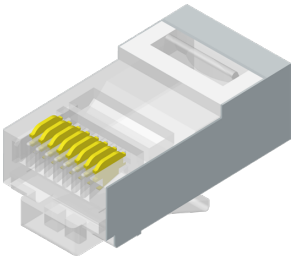

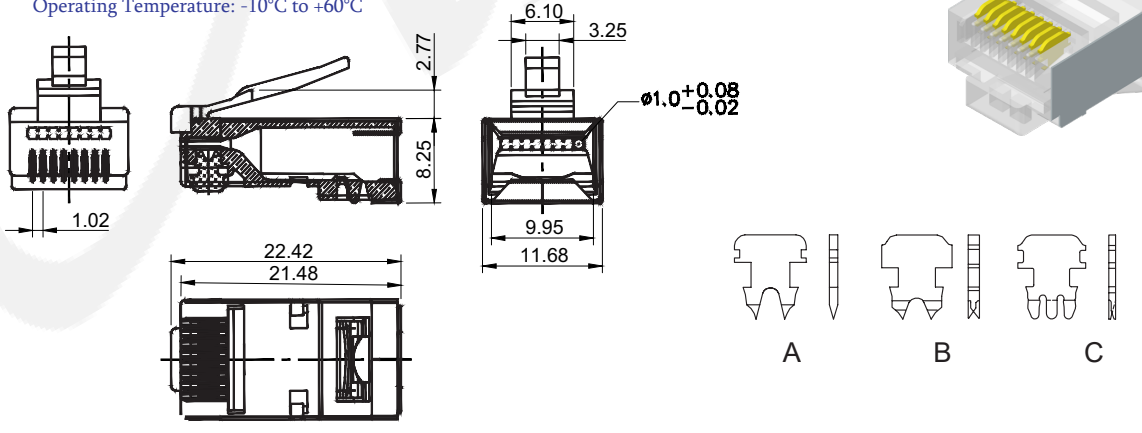

ORDER INFORMATION

5	R	P	B	-	8	8	X	X	X	T	L	B	-	005	-	S	X

- B: Stainless Steel, Long Body, Flat Cable
- Number of Positions: 8: 8 Positions
- Number of Contacts: 8: 8 Contacts
- S0: Selective Au; GA: Au 6u"; GF: Au 15u"; GD: Au 30u"; GH: Au 50u"
- A: 2 Prong for Stranded Conductor; B: 2 Prong for Stranded & Solid Conductor; C: 3 Prong for Stranded & Solid Conductor
- T: Transparent
- L: RoHS + PC
- B: Bag Package
- 005: Series No.
- S
- X: 1: UL 94V-0; 2: UL 94V-2

Modular Plug Shielded Long Body 8 Position

Specifications
Current Rating: 1.5 AMP
Insulation Resistance: 500mΩ Min.
Contact Resistance:30mΩ Max.
Dielectric Voltage: 1000V AC for one minute
Operating Temperature: -40°C to +85°C

Material
Housing: PC, UL94V-0
Contact Pin: Brass

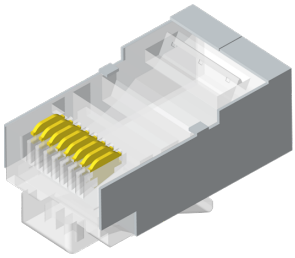

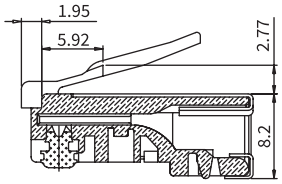

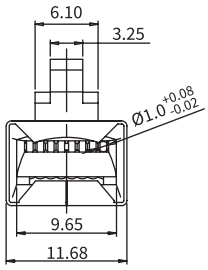

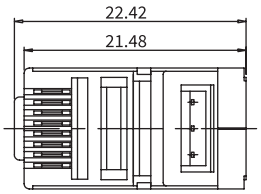

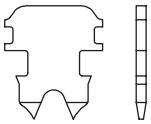

ORDER INFORMATION

5 R P A - 8 8 S 0 A T L B - 805 - S 1

- A:With Shielded, Long Body, Round Cable
- Number of Positions 8:8 Positions
- 8:8 Contacts
- S0:Selective Au
- A:2 Prong for Stranded Conductor
- T:Transparent
- L:RoHS + PC
- B:Bag Package
- Series No.

Modular Plug Shielded Long Body 10 Position

Specifications
Current Rating: 1.5 AMP
Insulation Resistance: 500mΩ Min.
Contact Resistance: 30mΩ Max.
Dielectric Voltage: 1000V AC for one minute
Operating Temperature: -40°C to +85°C

Material
Housing: PC, UL94V-2
Contact Pin: Phosphor Bronze

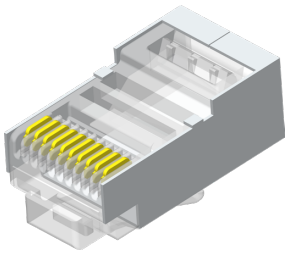

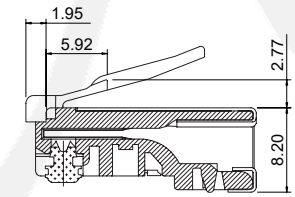

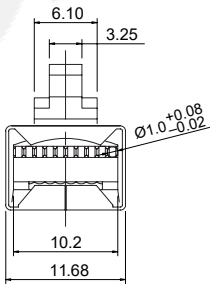

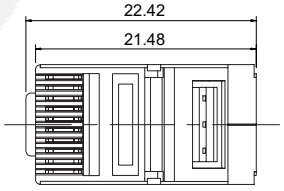

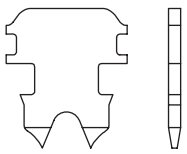

ORDER INFORMATION

5 R P A - A A S H A T L B - 101 - S 1

- A:With Shielded+long body+Round cable
- Number of Positions A:10 Positions
- Number of Contacts A:10 Contacts
- SH : Selective Au 50u"
- A:2 Prong for Stranded Conductor
- T:Transparent
- L:RoHS + PC
- B:Bag Package
- Series No.

MODULAR JACK

8-11 Modular Jack Side Entry H=11.45 W=17.9
HOT 8-11 Modular Jack Side Entry H=11.5 W=18.1
8-12 Modular Jack Side Entry H=12.75 W=17.75
8-12 Modular Jack Side Entry H=13.15 W=15.5
8-13 Modular Jack Side Entry H=13.2 W=20.54
8-13 Modular Jack Side Entry H=14.5 W=13.0
8-14 Modular Jack Side Entry H=14.5 W=15.0
8-14 Modular Jack 45° Entry H=21.32 W=17.4
8-15 Modular Jack Side Entry SMT Type H=11.5 W=18.1
HOT 8-15 Modular Jack Side Entry SMT Type H=11.5 W=18.1
8-16 Modular Jack Top Entry H=12.7 W=15.0
8-16 Modular Jack Top Entry H=15.7 W=15.0
8-17 Modular Jack Top Entry H=16.29 W=15.78
8-17 Modular Jack Side Entry R/A Type H=12.7 W=18.1
8-18 Modular Jack Shielded Side Entry H=12.0 W=18.6
8-18 Modular Jack Shielded Side Entry H=13.2 W=15.95
8-19 Modular Jack Shielded Side Entry H=13.2 W=18.4
8-19 Modular Jack Shielded Side Entry H=13.5 W=18.4
8-20 Modular Jack Shielded Side Entry H=13.8 W=21.2
HOT 8-20 Modular Jack Shielded Side Entry H=14.9 W=14.8
HOT 8-21 Modular Jack Shielded Side Entry SMT Type H=8.6 W=13.3
8-21 Modular Jack Shielded Side Entry SMT Type H=11.75 W=18.65
8-22 Modular Jack Shielded Side Entry SMT Type H=13.25 W=15.6
HOT 8-22 Modular Jack Shielded Side Entry With LED H=11.05 W=15.3
8-23 Modular Jack Shielded Side Entry With LED H=11.4 W=17.35
HOT 8-23 Modular Jack Shielded Side Entry With LED H=13.5 W=15.7
8-24 Modular Jack Shielded Side Entry With LED H=13.6 W=21.2
8-24 Modular Jack Shielded Top Entry H=16.1 W=16.8
8-25 Modular Jack Shielded Top Entry H=16.59 W=17.16
8-25 Modular Jack Shielded 45° Entry H=21.32 W=17.4
HOT 8-26 Modular Jack Shielded Side Entry 2×4 Port With LED H=25.4 W=28.15
HOT 8-27 Transformer Modular Jack Shielded Side Entry 1×1 Port With LED H=13.45 W=21.1
8-28 Transformer Modular Jack Shielded Side Entry 1×1 Port With LED H=13.45 W=21.1
8-29 Transformer Modular Jack Shielded Side Entry 1×1 Port With LED H=13.45 W=21.1
8-30 Transformer Modular Jack Shielded Side Entry 1×1 Port With LED H=13.7 W=32.5
HOT 8-31 Transformer Modular Jack Shielded Side Entry 1×2 Port With LED H=13.55 W=21.1
8-32 Transformer Modular Jack Shielded Side Entry 2×4 Port With LED H=25.5 W=41.53

Modular Jack Side Entry H=11.45 W=17.9

Specifications
Current Rating: 1.5 AMP
Insulation Resistance: 500mΩ Min.
Contact Resistance: 30mΩ Max.
Dielectric Voltage: 1000V AC for one minute
Operating Temperature: -40°C to +85°C

Material
Housing:Nylon 46 or PBT, UL94V-0, Black
Contact Pin: Phosphor Bronze, Ø0.46mm

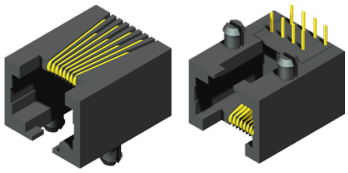

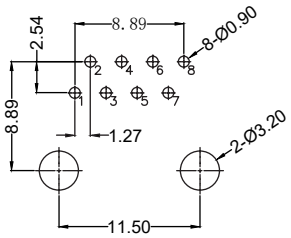

Recommended PCB Layout
(PCB TOLERANCE ±0.05)

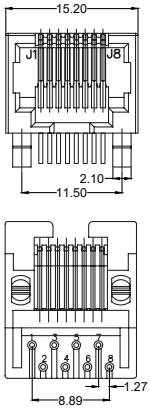

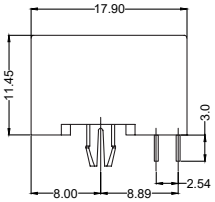

ORDER INFORMATION

5	R	J	1	D	R	0	0	N	0	N	-	8	8	X	X	0	0	X	-	532	-	R	1

- N: N:W/O Ear
- 8 (Number of Positions): 8:8 Positions
- 8 (Number of Contacts): 8:8 Contacts
- XX: G0:Gold Flash; GA:Au 6u"; GD:Au 30u"
- X: U:RoHS+Nylon46+Tray; L:RoHS+PBT+Tray
- 532: Series No.

Modular Jack Side Entry H=11.5 W=18.1

Specifications
Current Rating: 1.5 AMP
Insulation Resistance: 1000mΩ Min.
Contact Resistance: 40mΩ Max.
Dielectric Voltage: 1000V AC for one minute
Operating Temperature: -20°C to +75°C

Material
Housing: PBT, UL94V-0, Black
Contact Pin: Phosphor Bronze

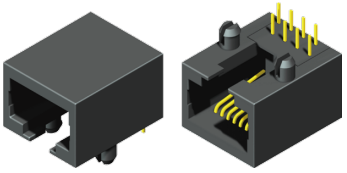

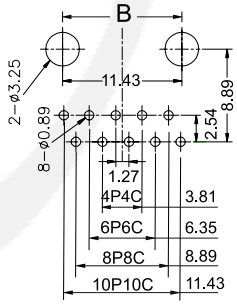

Recommended PCB Layout
(PCB TOLERANCE ±0.05)

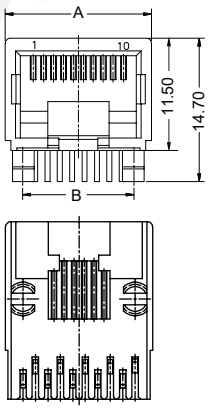

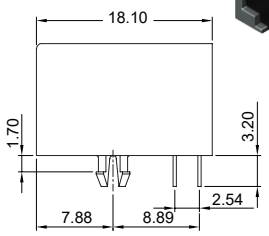

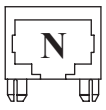

Without Ear

Position	Contacts	A	B
4P	4C	11.20	7.62
6P	6C	12.96	10.16
8P	8C	15.00	11.43
10P	10C	15.00	11.43

ORDER INFORMATION

5	R	J	1	D	R	0	0	N	0	N	-	X	X	X	X	0	0	L	-	504	-	Y	1

- N: N:W/O Ear
- X (Number of Positions): 4:4 Positions; 6:6 Positions; 8:8 Positions; A:10 Positions
- X (Number of Contacts): 4:4 Contacts; 6:6 Contacts; 8:8 Contacts; A:10 Contacts
- XX: S0:Selective Au; SA:Selective Au 6u"
- L: L:RoHS+PBT+Tray
- 504: Series No.

Modular Jack Side Entry H=12.75 W=17.75

Specifications
Current Rating: 1.5 AMP
Insulation Resistance: 500mΩ Min.
Contact Resistance: 30mΩ Max.
Dielectric Voltage: 1000V AC for one minute
Operating Temperature: -40°C to +85°C

Material
Housing: PBT, UL94V-0, Black
Contact Pin: Phosphor Bronze, Ø0.46mm

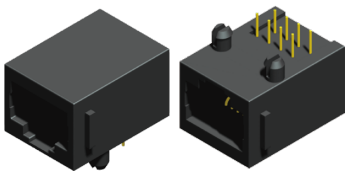

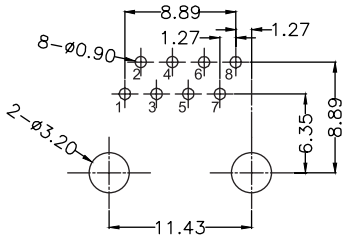

Recommended PCB Layout
(PCB TOLERANCE ±0.05)

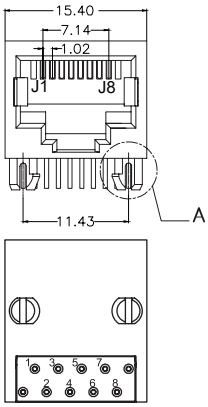

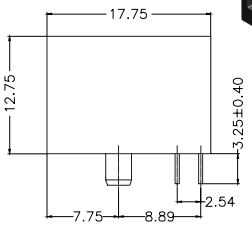

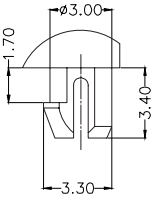

Detail A

ORDER INFORMATION

5	R	J	1	D	R	0	0	N	0	N	-	8	8	G	0	0	0	L	-	562	-	R	1

- N: N:W/O Ear
- 8: Number of Positions — 8:8 Positions
- 8: Number of Contacts — 8:8 Contacts
- G000: G0:Gold Flash
- L: L:RoHS+PBT+Tray
- 562: Series No.
- R1

Modular Jack Side Entry H=13.15 W=15.15

Specifications
Current Rating: 1.5 AMP
Insulation Resistance: 1000mΩ Min.
Contact Resistance: 40mΩ Max.
Dielectric Voltage: 1000V AC for one minute
Operating Temperature: -40°C to +85°C

Material
Housing: PBT, UL94V-0, Black
Contact Pin: Phosphor Bronze

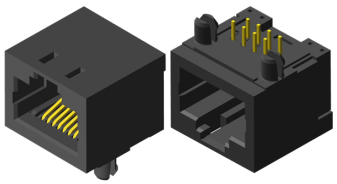

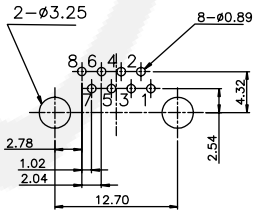

Recommended PCB Layout
(PCB TOLERANCE ±0.05)

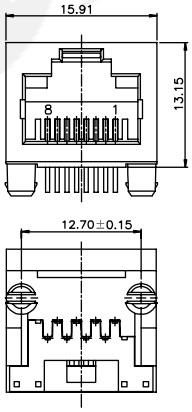

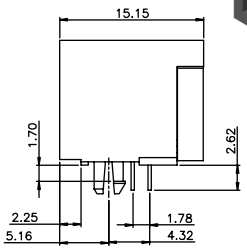

ORDER INFORMATION

5	R	J	1	D	R	0	0	N	0	N	-	8	8	X	X	0	0	L	-	546	-	Y	1

- N: N:W/O Ear
- 8: Number of Positions — 8:8 Positions
- 8: Number of Contacts — 8:8 Contacts
- XX00: S0:Selective Au; SA:Selective Au 6u"
- L: L:RoHS+PBT+Tray
- 546: Series No.
- Y1

Modular Jack Side Entry H=13.2 W=20.54

Specifications
Current Rating: 1.5 AMP
Insulation Resistance: 500mΩ Min.
Contact Resistance: 30mΩ Max.
Dielectric Voltage: 1000V AC for one minute
Operating Temperature: -40°C to +85°C

Material
Housing: PBT, UL94V-0, Black
Contact Pin: Phosphor Bronze, Ø0.46mm

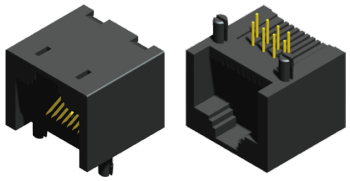

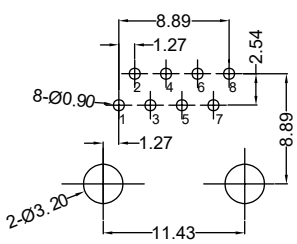

Recommended PCB Layout
(PCB TOLERANCE ±0.05)

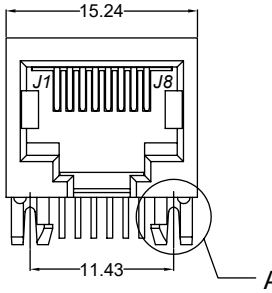

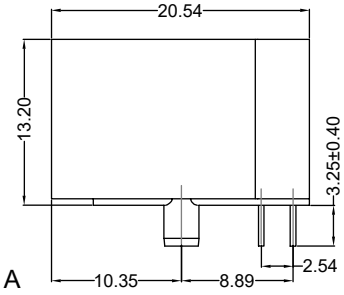

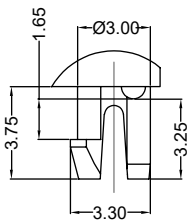

Detail A

ORDER INFORMATION

5	R	J	1	D	R	0	0	N	0	N	-	8	8	G	A	0	0	L	-	592	-	R	1

- N: W/O Ear
- 8 8: Number of Positions — 8:8 Positions; Number of Contacts — 8:8 Contacts
- GA: Au 6u"
- L: RoHS+PBT+Tray
- 592: Series No.

Modular Jack Side Entry H=14.5 W=13.0

Specifications
Current Rating: 1.5 AMP
Insulation Resistance: 500mΩ Min.
Contact Resistance: 30mΩ Max.
Dielectric Voltage: 1000V AC for one minute
Operating Temperature: -40°C to +85°C

Material
Housing: PBT, UL94V-0, Black
Terminal: Phosphor Bronze, Ø0.46mm

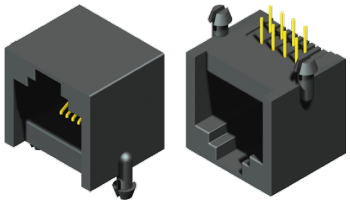

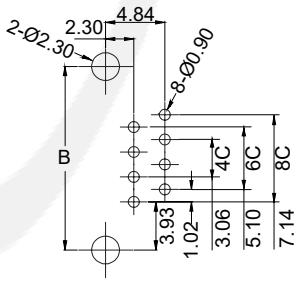

Recommended PCB Layout
(PCB TOLERANCE ±0.05)

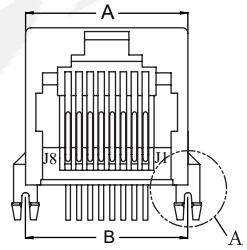

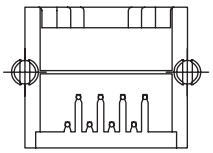

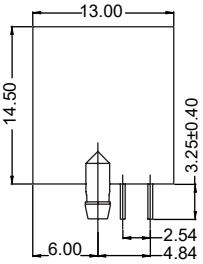

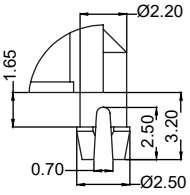

Detail A

Position	Contacts	A	B
4P	4C	10.00	10.00
6P	4C	12.20	12.00
6P	6C	12.20	12.00
8P	8C	15.00	15.00

ORDER INFORMATION

5	R	J	1	D	R	0	0	N	0	N	-	X	X	G	A	0	0	L	-	552	-	R	1

- N: W/O Ear
- X X: Number of Positions — 4:4 Positions; 6:6 Positions; 8:8 Positions; Number of Contacts — 4:4 Contacts; 6:6 Contacts; 8:8 Contacts
- GA: Au 6u"
- L: RoHS+PBT+Tray
- 552: Series No.
- Black

Modular Jack Side Entry H=14.5 W=15.0

Specifications
Current Rating: 1.5 AMP
Insulation Resistance: 500mΩ Min.
Contact Resistance: 30mΩ Max.
Dielectric Voltage: 1000V AC for one minute
Operating Temperature: -40°C to +85°C

Material
Housing: PBT, UL94V-0, Black
Contact Pin: Phosphor Bronze, Ø0.45mm

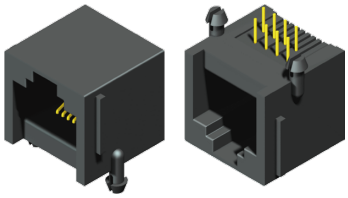

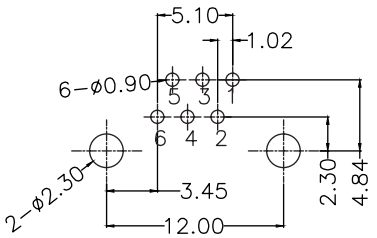

Recommended PCB Layout
(PCB TOLERANCE ±0.05)

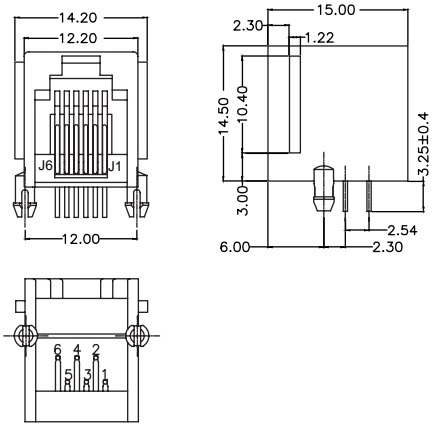

ORDER INFORMATION

5	R	J	1	D	R	0	0	N	0	E	-	6	6	G	0	0	0	L	-	552	-	R	4

- E: With Ear
- Number of Positions: 6:6 Positions
- Number of Contacts: 6:6 Contacts
- G0: Gold Flash
- L: RoHS+PBT+Tray
- Series No.: 552
- Special Width: R4 = 15.00mm

Modular Jack 45° Entry H=21.32 W=17.4

Specifications
Current Rating: 1.5 AMP
Insulation Resistance: 500mΩ Min.
Contact Resistance: 30mΩ Max.
Dielectric Voltage: 1000V AC for one minute
Operating Temperature: -40°C to +85°C

Material
Housing: PBT, UL94V-0, Natural
Terminal: Phosphor Bronze, T=0.35mm

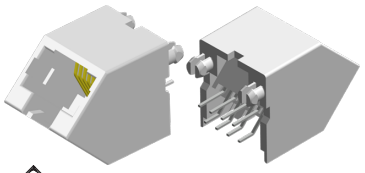

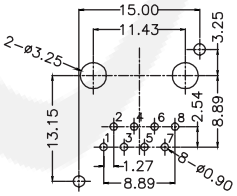

Recommended PCB Layout
(PCB TOLERANCE ±0.05)

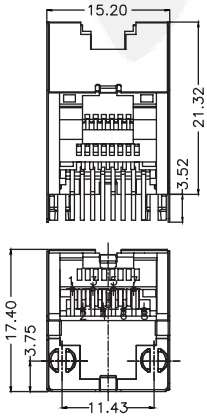

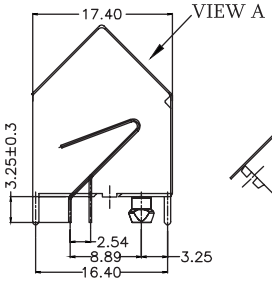

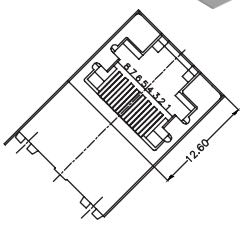

VIEW A

ORDER INFORMATION

5	R	J	1	D	D	0	0	N	0	N	-	8	8	X	X	0	0	L	-	52C	-	R	1

- N: W/O Ear
- Number of Positions: 8:8 Positions
- Number of Contacts: 8:8 Contacts
- SA: Selective Au 6u"
- SD: Selective Au 30u"
- L: RoHS+PBT+Tray
- Series No.: 52C

Modular Jack Side Entry SMT Type H=11.5 W=18.1

Specifications
Current Rating: 1.5 AMP
Insulation Resistance: 500mΩ Min.
Contact Resistance: 30mΩ Max.
Dielectric Voltage: 1000V AC for one minute
Operating Temperature: -40°C to +85°C

Material
Housing: PA9T, UL94V-0, Black
Terminal: Phosphor Bronze, T=0.35mm

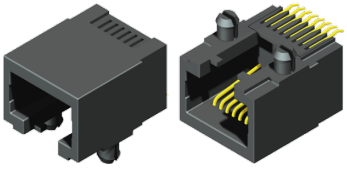

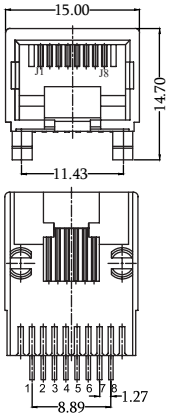

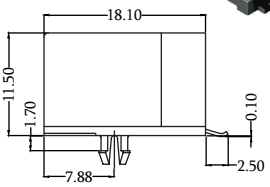

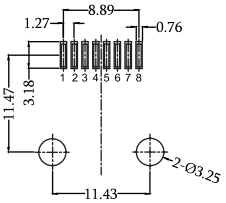

Recommended PCB Layout
(PCB TOLERANCE ±0.05)

ORDER INFORMATION

5	R	J	1	M	R	0	0	N	0	N	-	8	8	S	A	0	0	X	-	111	-	R	1
										N:W/O Ear		Number of Positions 8:8 Positions	Number of Contacts 8:8 Contacts		SA:Selective Au 6u"			R:RoHS+PA9T+T/R U:RoHS+PA9T+Tray		Series No.			

Modular Jack Side Entry SMT Type H=11.5 W=18.1

Specifications
Current Rating: 1.5 AMP
Insulation Resistance: 500mΩ Min.
Contact Resistance: 30mΩ Max.
Dielectric Voltage: 1000V AC for one minute
Operating Temperature: -40°C to +85°C

Material
Housing: FR52, UL94V-0, Black
Terminal: Phosphor Bronze, T=0.3mm

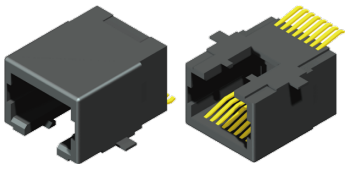

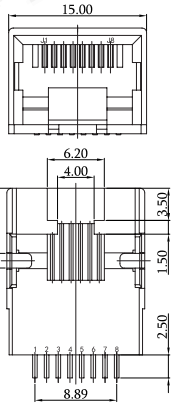

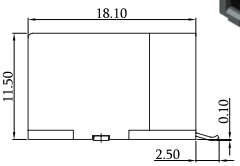

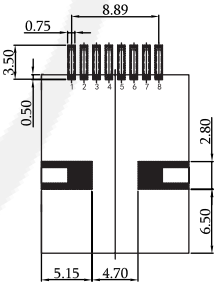

Recommended PCB Layout
Viewed From Component Side

ORDER INFORMATION

5	R	J	1	M	R	0	0	N	0	N	-	8	8	S	A	0	0	U	-	56T	-	R	1
										N:W/O Ear		Number of Positions 8:8 Positions	Number of Contacts 8:8 Contacts		SA:Selective Au 6u"			U:RoHS+FR52+Tray		Series No.			

Modular Jack Top Entry H=12.7 W=15

Specifications
Current Rating: 1.5 AMP
Insulation Resistance: 1000mΩ Min.
Contact Resistance: 40mΩ Max.
Dielectric Voltage: 1000V AC for one minute
Operating Temperature: -20°C to +75°C

Material
Housing: PBT, UL94V-0, Black
Terminal: Phosphor Bronze

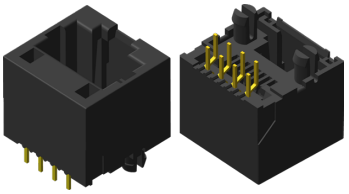

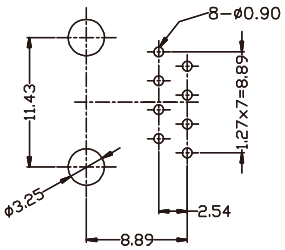

Recommended PCB Layout
(PCB TOLERANCE ±0.05)

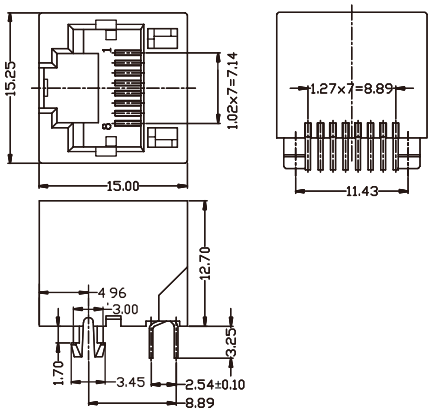

ORDER INFORMATION

5	R	J	1	D	S	0	0	N	0	N	-	8	8	X	X	0	0	L	-	61N	-	Y	1

- N: N:W/O Ear
- 8 (Number of Positions): 8:8 Positions
- 8 (Number of Contacts): 8:8 Contacts
- XX: S0:Selective Au / SA:Selective Au 6u"
- L: L:RoHS+PBT+Tray
- 61N: Series No.

Modular Jack Top Entry H=15.7 W=15.0

Specifications
Current Rating: 1.5 AMP
Insulation Resistance: 500mΩ Min.
Contact Resistance: 30mΩ Max.
Dielectric Voltage: 1000V AC for one minute
Operating Temperature: -40°C to +85°C

Material
Housing: PBT, UL94V-0, Black
Terminal: Phosphor Bronze, T=0.35mm

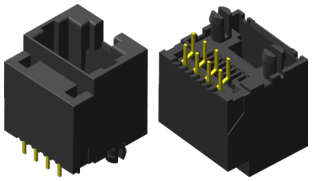

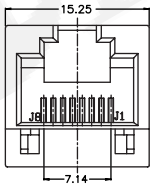

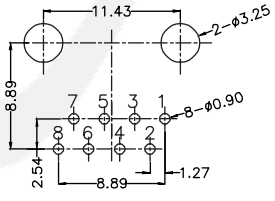

Recommended PCB Layout
(PCB TOLERANCE ±0.05)

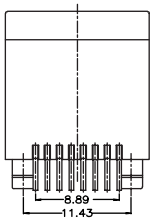

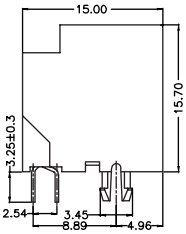

Color Table		
NO.	Housing	Terminals Bracket
1	Black	Pink
2	Pink	Pink

ORDER INFORMATION

5	R	J	1	D	S	0	0	N	0	N	-	8	8	S	A	0	0	L	-	52F	-	R	X

- N: N:W/O Ear
- 8 (Number of Positions): 8:8 Positions
- 8 (Number of Contacts): 8:8 Contacts
- SA: SA:Selective Au 6u"
- L: L:RoHS+PBT+Tray
- 52F: Series No.
- RX: See Table

Modular Jack Top Entry H=16.29 W=15.78

Specifications
Current Rating: 1.5 AMP
Insulation Resistance: 1000mΩ Min.
Contact Resistance: 40mΩ Max.
Dielectric Voltage: 1000V AC for one minute
Operating Temperature: -20°C to +75°C

Material
Housing: PBT, UL94V-0, Black
Contact Pin: Phosphor Bronze

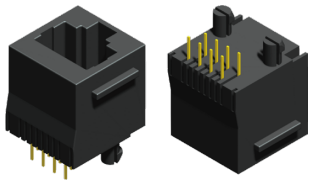

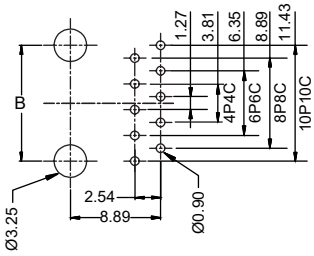

Recommended PCB Layout
(PCB TOLERANCE ±0.05)

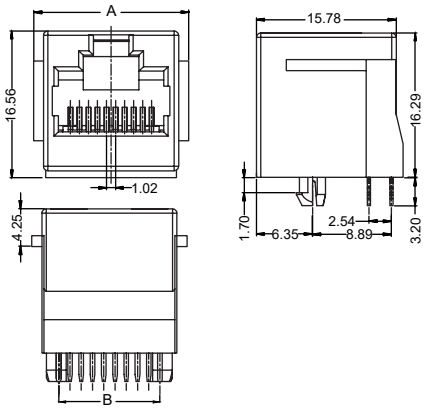

Position	Contacts	A	B
4P	4C	13.97	7.62
6P	6C	16.00	10.16
8P	8C	17.50	11.43
10P	10C	17.50	11.43

ORDER INFORMATION

5	R	J	1	D	S	0	0	N	0	X	-	X	X	X	X	0	0	L	-	609	-	Y	1

- X: N:W/O Ear; E:With Ear
- X: Number of Positions — 4:4 Positions; 6:6 Positions; 8:8 Positions; A:10 Positions
- X: Number of Contacts — 4:4 Contacts; 6:6 Contacts; 8:8 Contacts; A:10 Contacts
- XX: S0:Selective Au; SA:Selective Au 6u"
- L: L:RoHS+PBT+Tray
- 609: Series No.

Modular Jack Side Entry R/A Type H=12.7 W=18.1

Specifications
Current Rating: 1.5 AMP
Insulation Resistance: 500mΩ Min.
Contact Resistance: 30mΩ Max.
Dielectric Voltage: 1000V AC for one minute
Operating Temperature: -40°C to +85°C

Material
Housing: PBT, UL94V-0, Black
Terminal: Phosphor Bronze, T=0.35mm

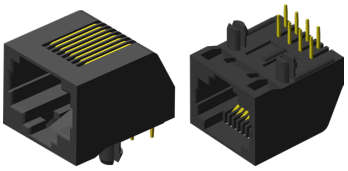

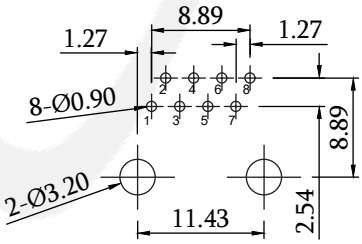

Recommended PCB Layout
(PCB TOLERANCE ±0.05)

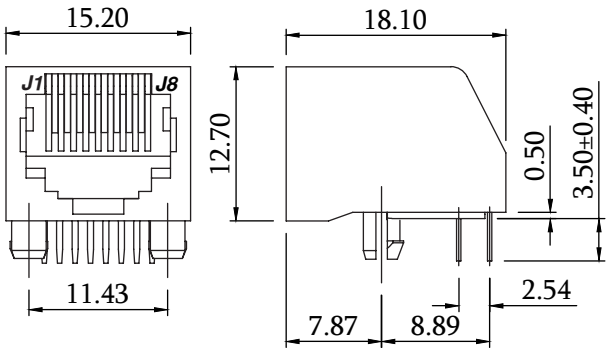

ORDER INFORMATION

5	R	J	1	D	R	0	0	N	0	N	-	8	8	S	A	0	0	L	-	572	-	R	2

- N: N:W/O Ear
- 8: Number of Positions — 8:8 Positions
- 8: Number of Contacts — 8:8 Contacts
- SA: SA:Selective Au 6u"
- L: L:RoHS+PBT+Tray
- 572: Series No.

Modular Jack Shielded Side Entry H=12.0 W=18.6

Specifications
Current Rating: 1.5 AMP
Insulation Resistance: 500mΩ Min.
Contact Resistance: 30mΩ Max.
Dielectric Voltage: 1000V AC for one minute
Operating Temperature: -40°C to +85°C

Material
Housing: PBT Or Nylon 9T, UL94V-0, Black
Terminal: Phosphor Bronze, Ø0.46mm
Shield: C2680, T=0.20mm, Nickel Plating On All Area

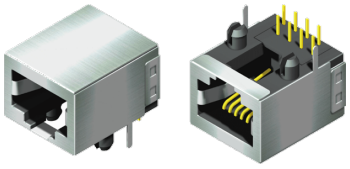

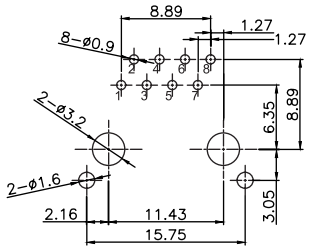

Recommended PCB Layout
(PCB TOLERANCE ±0.05)

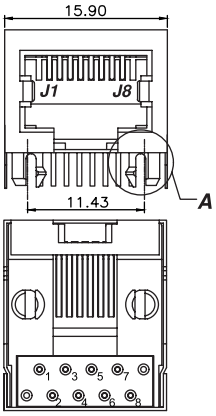

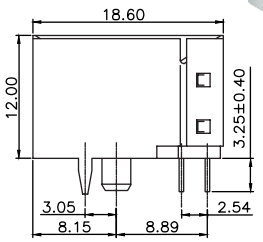

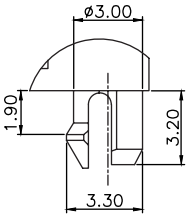

Detail A

ORDER INFORMATION

5	R	J	1	D	R	1	0	F	2	N	-	8	8	X	X	0	0	X	-	622	-	R	1

- 1: 1:Non Panel Ground
- N: N:W/O Ear
- 8: Number of Positions — 8:8 Positions
- 8: Number of Contacts — 8:8 Contacts
- XX: G0:Gold Flash; GA:Gold 6u"; GD:Gold 30u"
- X: L:RoHS+PBT+Tray; U:RoHS+NY9T+Tray
- 622: Series No.

Modular Jack Shielded Side Entry H=13.2 W=15.95

Specifications
Current Rating: 1.5 AMP
Insulation Resistance: 500mΩ Min.
Contact Resistance: 30mΩ Max.
Dielectric Voltage: 1000V AC for one minute
Operating Temperature: -40°C to +85°C

Material
Housing: PBT, UL94V-0, Black
Terminal: Phosphor Bronze, T=0.46mm
Shield: C2680, T=0.20mm, Nickel Plating On All Area

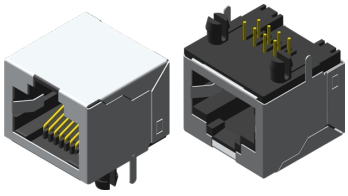

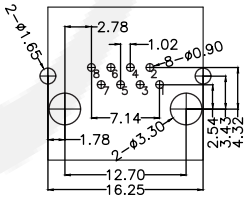

Recommended PCB Layout
(PCB TOLERANCE ±0.05)

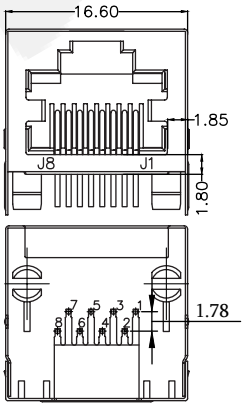

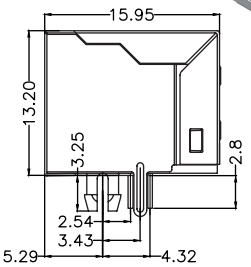

ORDER INFORMATION

5	R	J	1	D	R	1	0	R	4	N	-	8	8	G	A	0	0	L	-	561	-	R	2

- 1: 1:Non Panel Ground
- N: N:W/O Ear
- 8: Number of Positions — 8:8 Positions
- 8: Number of Contacts — 8:8 Contacts
- GA: GA: Au 6u"
- L: L:RoHS+PBT+Tray
- 561: Series No.

Modular Jack Shielded Side Entry H=13.2 W=18.4

Specifications
Current Rating: 1.5 AMP
Insulation Resistance: 500mΩ Min.
Contact Resistance: 30mΩ Max.
Dielectric Voltage: 1000V AC for one minute
Operating Temperature: -40°C to +85°C

Material
Housing: PBT, UL94V-0, Black
Terminal: Phosphor Bronze, T=0.35mm
Shield: C2680, T=0.20mm, Nickel Plating On All Area

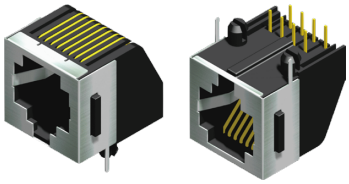

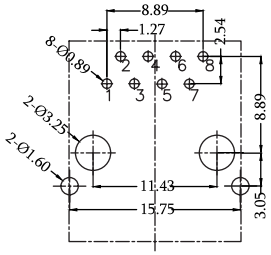

Recommended PCB Layout
(PCB TOLERANCE ±0.05)

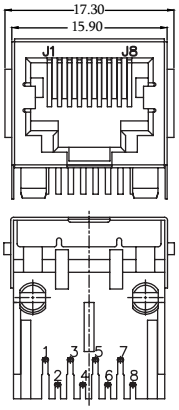

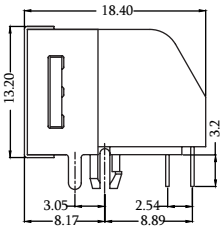

ORDER INFORMATION

5	R	J	1	D	R	1	0	F	2	E	-	8	8	S	A	0	0	L	-	572	-	R	1
						1:Non Panel Ground				E:With Ear		Number of Positions 8:8 Positions	Number of Contacts 8:8 Contacts			SA:Selective Au 6u"		L:RoHS+PBT+Tray		Series No.			

Modular Jack Shielded Side Entry H=13.5 W=18.4

Specifications
Current Rating: 1.5 AMP
Insulation Resistance: 500mΩ Min.
Contact Resistance: 30mΩ Max.
Dielectric Voltage: 1000V AC for one minute
Operating Temperature: -40°C to +85°C

Material
Housing: PBT, UL94V-0, Black
Terminal: Phosphor Bronze, Ø0.46mm
Shield: C2680, T=0.20mm, Nickel Plating On All Area

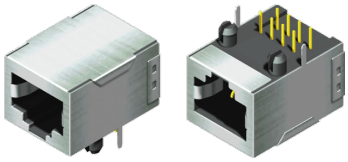

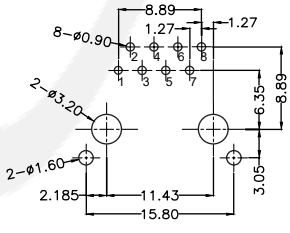

Recommended PCB Layout
(PCB TOLERANCE ±0.05)

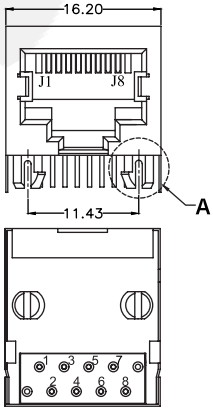

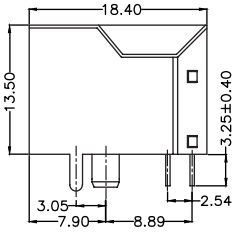

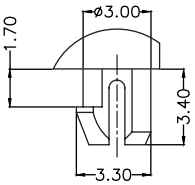

Detail A

ORDER INFORMATION

5	R	J	1	D	R	1	0	F	2	N	-	8	8	G	A	0	0	L	-	521	-	R	1
						1:Non Panel Ground				N:W/O Ear		Number of Positions 8:8 Positions	Number of Contacts 8:8 Contacts			GA:Gold 6u"		L:RoHS+PBT+Tray		Series No.			

RoHS

Modular Jack Shielded Side Entry H=13.8 W=21.20

Specifications
Current Rating: 1.5 AMP
Insulation Resistance: 500mΩ Min.
Contact Resistance: 30mΩ Max.
Dielectric Voltage: 1000V AC for one minute
Operating Temperature: -40°C to +85°C

Material
Housing: PBT, UL94V-0, Black
Terminal: Phosphor Bronze, T=0.35mm
Shield: C2680, T=0.20mm, Nickel Plating On All Area

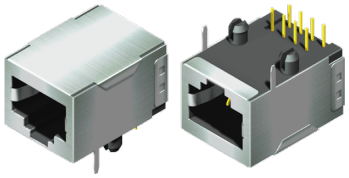

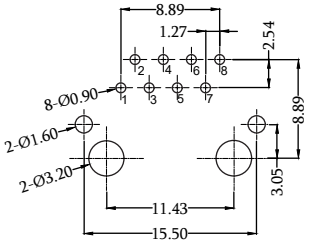

Recommended PCB Layout
(PCB TOLERANCE ±0.05)

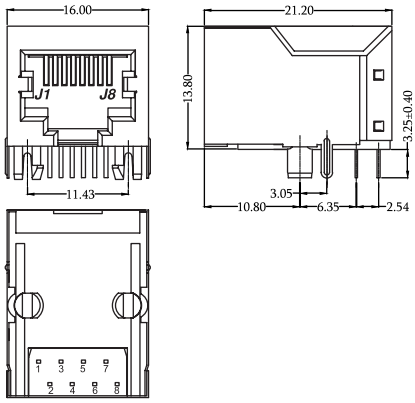

ORDER INFORMATION

5 R J 1 D R 1 0 R 2 N - X X X X 0 0 L - 592 - R 1

- 1: 1:Non Panel Ground
- N: N:W/O Ear
- X (Number of Positions): 8:8 Positions
- X (Number of Contacts): 8:8 Contacts
- XX: SA:Selective Au 6u" / SD:Selective Au 30u"
- L: L:RoHS+PBT+Tray
- 592: Series No.

Modular Jack Shielded Side Entry H=14.9 W=14.8

Specifications
Current Rating: 1.5 AMP
Insulation Resistance: 500mΩ Min.
Contact Resistance: 30mΩ Max.
Dielectric Voltage: 1000V AC for one minute
Operating Temperature: -40°C to +85°C

Material
Housing: PBT, UL94V-0, Black
Terminal: Phosphor Bronze, T=0.35mm
Shield: C2680, T=0.20mm, Nickel Plating On All Area

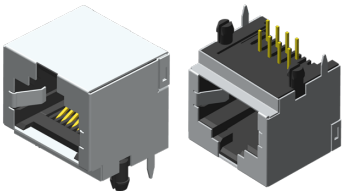

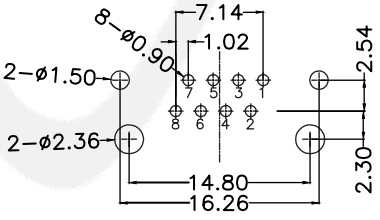

Recommended PCB Layout
(PCB TOLERANCE ±0.05)

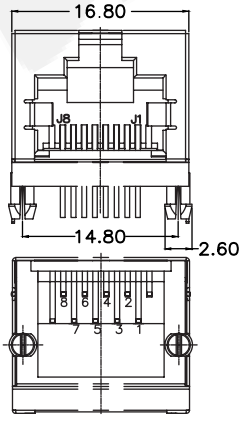

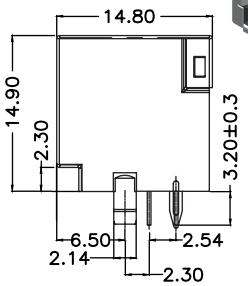

ORDER INFORMATION

5 R J 1 D R 1 0 R 9 N - 8 8 S A 0 0 L - 552 - R 1

- 1: 1:Non Panel Ground
- N: N:W/O Ear
- 8 (Number of Positions): 8:8 Positions
- 8 (Number of Contacts): 8:8 Contacts
- SA: SA:Selective Au 6u"
- L: L:RoHS+PBT+Tray
- 552: Series No.

Modular Jack Shielded Side Entry SMT Type H=8.6 W=13.3

Specifications
Current Rating: 1.5 AMP
Insulation Resistance: 500mΩ Min.
Contact Resistance: 30mΩ Max.
Dielectric Voltage: 1000V AC for one minute
Operating Temperature: -40°C to +85°C

Material
Housing: LCP, UL94V-0, Black
Terminal: Phosphor Bronze, T=0.35mm
Shield: C2680, T=0.20mm, Nickel Plating On All Area

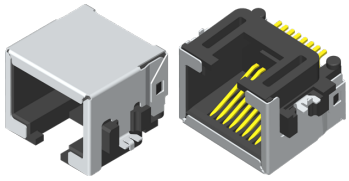

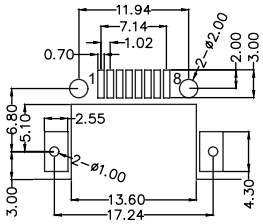

Recommended PCB Layout
(PCB TOLERANCE ±0.05)

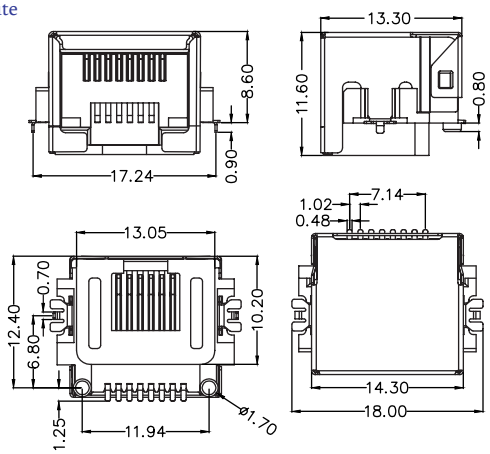

ORDER INFORMATION

5	R	J	1	M	R	1	0	F	D	N	-	8	8	X	X	0	0	U	-	861	-	R	1
						1:Non Panel Ground				N:W/O Ear		Number of Positions 8:8 Positions	Number of Contacts 8:8 Contacts			S0:Selective Au		U:RoHS+LCP+Tray		Series No.			

Modular Jack Shielded Side Entry SMT Type H=11.75 W=18.65

Specifications
Current Rating: 1.5 AMP
Insulation Resistance: 500mΩ Min.
Contact Resistance: 30mΩ Max.
Dielectric Voltage: 1000V AC for one minute
Operating Temperature: -20°C to +75°C

Material
Housing: Nylon 9T, UL94V-0, Black
Terminal: Phosphor Bronze, T=0.35mm
Shield: Brass Plating Nickel

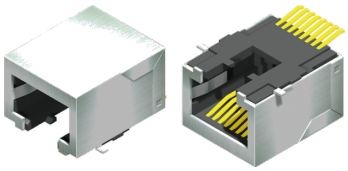

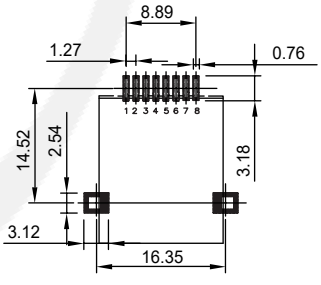

Recommended PCB Layout
(PCB TOLERANCE ±0.05)

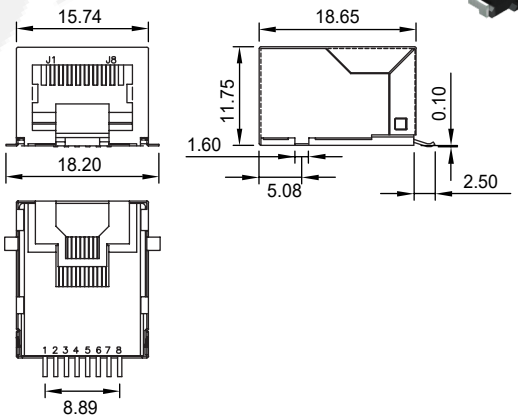

ORDER INFORMATION

5	R	J	1	M	R	1	0	N	0	N	-	8	8	X	X	0	0	U	-	111	-	R	1
						1:Non Panel Ground				N:W/O Ear		Number of Positions 8:8 Positions	Number of Contacts 8:8 Contacts			SA:Selective Au 6u"		U:RoHS+NY9T+Tray		Series No.			

RoHS

Modular Jack Shielded Side Entry SMT Type H=13.25 W=15.6

Specifications
Current Rating: 1.5 AMP
Insulation Resistance: 500mΩ Min.
Contact Resistance: 30mΩ Max.
Dielectric Voltage: 1000V AC for one minute
Operating Temperature: -40°C to +85°C

Material
Housing: LCP, UL94V-0, Black
Contact Pin: Phosphor Bronze, T=0.3mm
Shield: Brass, Nickel Plated

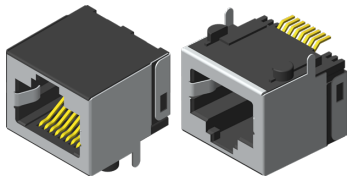

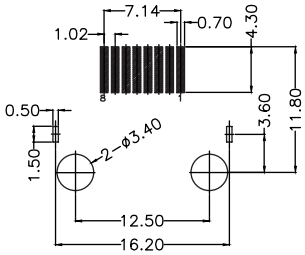

Recommended PCB Layout
(PCB TOLERANCE ±0.05)

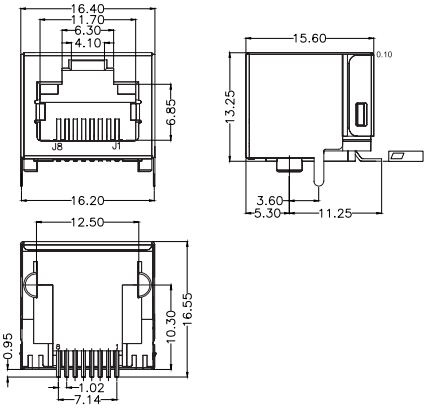

ORDER INFORMATION

5	R	J	1	M	R	1	0	R	5	N	-	8	8	S	0	0	0	U	-	561	-	R	1
						1:Non Panel Ground				N:W/O Ear		Number of Positions 8:8 Positions	Number of Contacts 8:8 Contacts	S0:Selective Au				U:RoHS+LCP+Tray		Series No.			

Modular Jack Shielded Side Entry With LED H=11.05 W=15.3

Specifications
Current Rating: 1.5 AMP
Insulation Resistance: 500mΩ Min.
Contact Resistance: 30mΩ Max.
Dielectric Voltage: 1000V AC for one minute
Operating Temperature: -40°C to +85°C

Material
Housing: LCP, UL94V-0, Black
Terminal: Phosphor Bronze, T=0.35mm
Shield: Brass, T=0.20mm, Nickel Plating

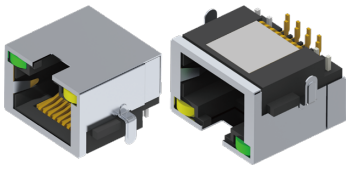

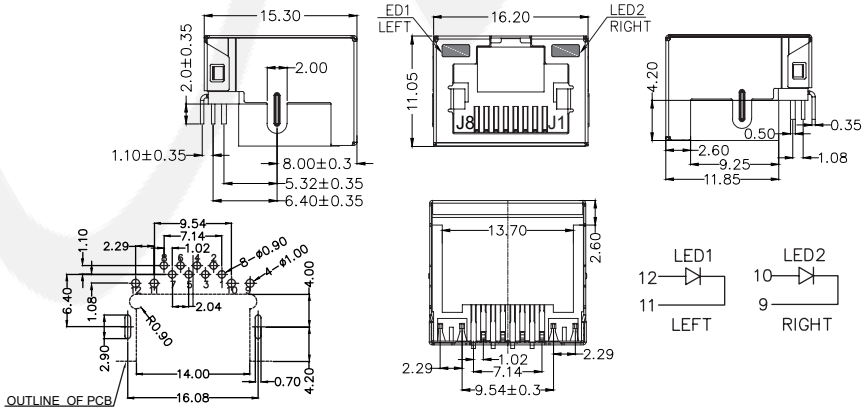

Recommended PCB Layout
(PCB TOLERANCE ±0.05)

LED Specification

Standard LED Color	LED Wavelength	Forward (A)	Forward (V)
Green	568nm	20mA	1.85~2.45V
Yellow	568nm	20mA	1.7~2.2V

LED Color Options Table

No.	Left(LED1)	Right(LED2)
1	Yellow	Green
2	Yellow	Yellow
3	Green	Yellow
4	Green	Green

ORDER INFORMATION

5	R	J	1	D	R	1	0	N	0	N	-	8	8	S	0	P	X	U	-	421	-	R	1
						1:Non Panel Ground				N:W/O Ear		Number of Positions 8:8 Positions	Number of Contacts 8:8 Contacts	S0:Selective Au		P:Parallel Pin	LED Color See Table	U:RoHS+LCP+Tray		Series No.			

Modular Jack Shielded Side Entry With LED H=11.4 W=17.35

Specifications
Current Rating: 1.5 AMP
Insulation Resistance: 500mΩ Min.
Contact Resistance: 30mΩ Max.
Dielectric Voltage: 1000V AC for one minute
Operating Temperature: -40°C to +85°C

Material
Housing: LCP, UL94V-0, Black
Terminal: Phosphor Bronze, T=0.35mm
Shield: Brass, T=0.20mm, 20 Min Nickel Plating

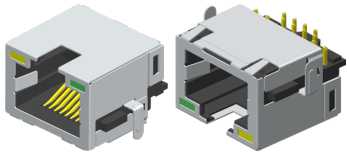

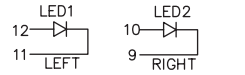

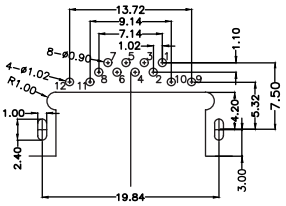

Recommended PCB Layout
(PCB TOLERANCE ±0.05)

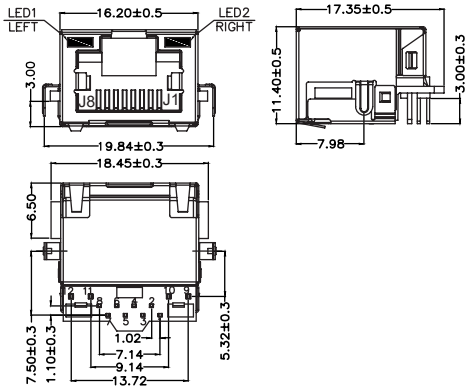

LED Specification

Standard LED Color	LED Wavelength	Forward(A)	Forward(V)
Green	568nm	20mA	1.85~2.45V
Yellow	568nm	20mA	1.7~2.2V

LED Color Options Table

No.	Left(LED1)	Right(LED2)
1	Yellow	Green
2	Yellow	Yellow
3	Green	Yellow
4	Green	Green

ORDER INFORMATION

5	R	J	1	D	R	1	0	N	0	N	-	8	8	S	0	P	X	U	-	301	-	R	1

- 1: 1:Non Panel Ground
- N: N:W/O Ear
- 8: Number of Positions, 8:8 Positions
- 8: Number of Contacts, 8:8 Contacts
- S0: S0:Selective Au
- P: P:Parallel Pin
- X: LED Color, See Table
- U: U:RoHS+LCP+Tray
- 301: Series No.

Modular Jack Shielded Side Entry With LED H=13.5 W=15.7

Specifications
Current Rating: 1.5 AMP
Insulation Resistance: 500mΩ Min.
Contact Resistance: 30mΩ Max.
Dielectric Voltage: 1000V AC for one minute
Operating Temperature: -40°C to +85°C

Material
Housing: PBT, UL94V-0, Black
Terminal: Phosphor Bronze, T=0.35mm
Shield: C2680, T=0.20mm, 20 Min Nickel Plating

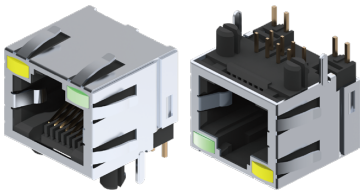

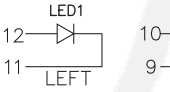

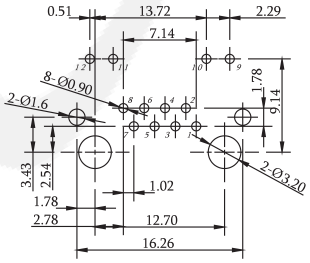

Recommended PCB Layout
(PCB TOLERANCE ±0.05)

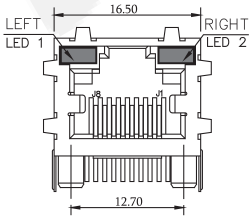

Front View

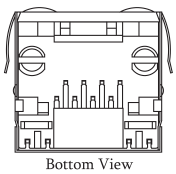

Bottom View

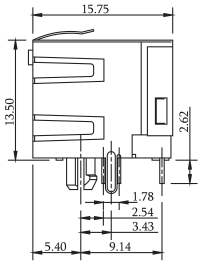

Right Side View

LED Specification

Standard LED Color	LED Wavelength	Forward(A)	Forward(V)
Green	568nm	20mA	1.85~2.45V
Yellow	585nm	20mA	1.7~2.2V

LED Color Options Table

No.	Left(LED1)	Right(LED2)
1	Yellow	Green
2	Yellow	Yellow
3	Green	Yellow
4	Green	Green

ORDER INFORMATION

5	R	J	1	D	R	X	0	R	4	N	-	8	8	X	X	P	1	L	-	561	-	R	1

- 1: 1:Non Panel Ground, 2:Top & Side Panel Ground
- N: N:W/O Ear
- 8: Number of Positions, 8:8 Positions
- 8: Number of Contacts, 8:8 Contacts
- X: S0:Selective Au, SA:Selective Au 6u
- P: P:Parallel Pin
- L: L:RoHS+PBT+Tray
- 561: Series No.

RoHS

Modular Jack Shielded Side Entry With LED H=13.6 W=21.2

Specifications
Current Rating: 1.5 AMP
Insulation Resistance: 500mΩ Min.
Contact Resistance: 30mΩ Max.
Dielectric Voltage: 1000V AC for one minute
Operating Temperature: -40°C to +85°C

Material
Housing: LCP, UL94V-0, Black
Terminal: Phosphor Bronze, Ø0.46mm
Shield: Brass, T=0.20mm, 20 Min Nickel Plating

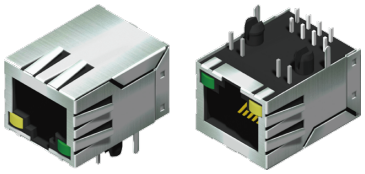

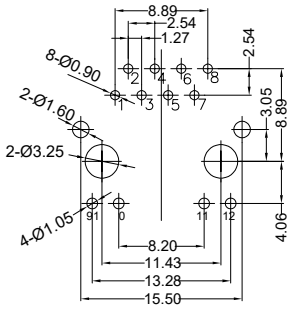

Recommended PCB Layout
(PCB TOLERANCE ±0.05)

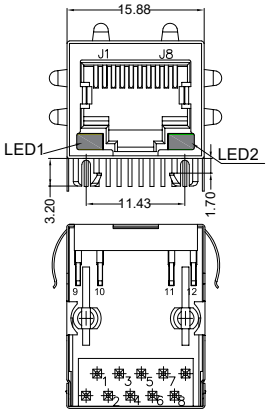

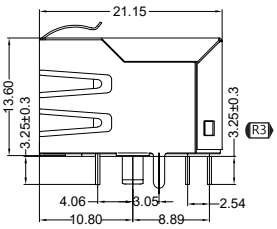

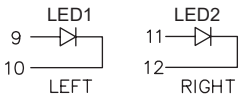

LED Specification

Standard LED Color	LED Wavelength	Forward (A)	Forward (V)
Green	568nm	20mA	1.85~2.45V
Yellow	568nm	20mA	1.7~2.2V

LED Color Options Table

No.	Left(LED1)	Right(LED2)
1	Yellow	Green
2	Yellow	Yellow
3	Green	Yellow
4	Green	Green

ORDER INFORMATION

5	R	J	1	D	R	X	0	R	2	N	-	8	8	G	0	P	X	L	-	592	-	R	3

- Panel Ground / 2:Top & Side Panel Ground
- N:W/O Ear
- Number of Positions: 8:8 Positions
- Number of Contacts: 8:8 Contacts
- G0:Gold Flash
- LED Color See Table
- L:RoHS+PBT+Tray
- Series No.
- Special Terminal Length

Modular Jack Shielded Top Entry H=16.1 W=16.8

Specifications
Current Rating: 1.5 AMP
Insulation Resistance: 500mΩ Min.
Contact Resistance: 30mΩ Max.
Dielectric Voltage: 1000V AC for one minute
Operating Temperature: -40°C to +85°C

Material
Housing: PBT, UL94V-0, Black
Terminal: Phosphor Bronze, Ø0.46mm
Shield: Brass, T=0.20mm

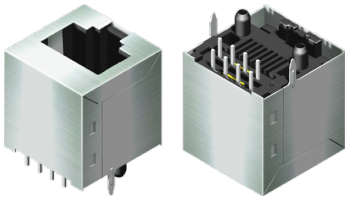

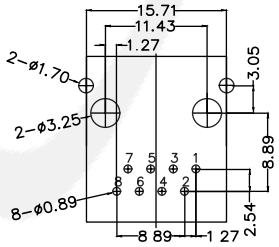

Recommended PCB Layout
(PCB TOLERANCE ±0.05)

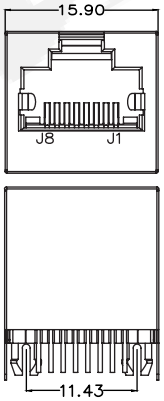

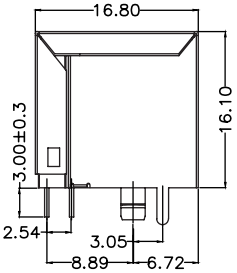

ORDER INFORMATION

5	R	J	1	D	S	1	0	F	2	N	-	8	8	G	0	0	0	L	-	522	-	R	1

- 1:Non Panel Ground
- N:W/O Ear
- Number of Positions: 8:8 Positions
- Number of Contacts: 8:8 Contacts
- G0:Gold Flash
- L:RoHS+PBT+Tray
- Series No.

Modular Jack Shielded Top Entry H=16.59 W=17.16

Specifications
Current Rating: 1.5 AMP
Insulation Resistance: 500mΩ Min.
Contact Resistance: 30mΩ Max.
Dielectric Voltage: 1000V AC for one minute
Operating Temperature: -20°C to +75°C

Material
Housing: PBT, UL94V-0, Black
Terminal: Phosphor Bronze, T=0.35mm
Shield: Brass, T=0.20mm, Nickel Plating

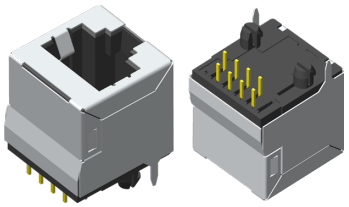

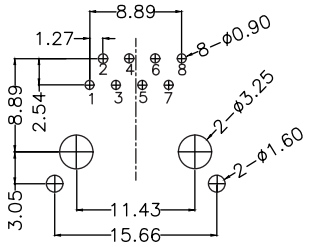

Recommended PCB Layout
(PCB TOLERANCE ±0.05)

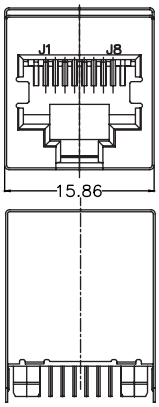

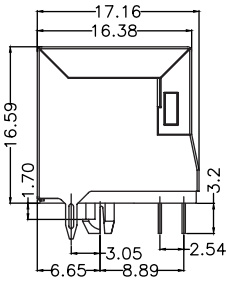

ORDER INFORMATION

5	R	J	1	D	S	1	0	F	2	N	-	8	8	X	X	0	0	L	-	228	-	R	1
						1:Non Panel Ground				N:W/O Ear		Number of Positions 8:8 Positions	Number of Contacts 8:8 Contacts	SA:Selective Au 6u" SD:Selective Au 30u" SH:Selective Au 50u"				L:RoHS+PBT+Tray		Series No.			

Modular Jack Shielded 45° Entry H=21.32 W=17.4

Specifications
Current Rating: 1.5 AMP
Insulation Resistance: 500mΩ Min.
Contact Resistance: 30mΩ Max.
Dielectric Voltage: 1000V AC for one minute
Operating Temperature: -40°C to +85°C

Material
Housing: PBT, UL94V-0, Natural
Terminal: Phosphor Bronze, T=0.35mm
Shield: Brass, T=0.20mm

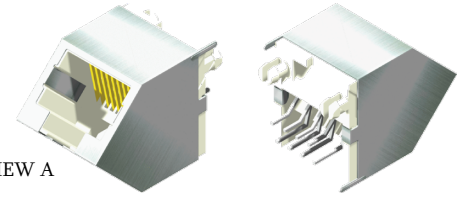

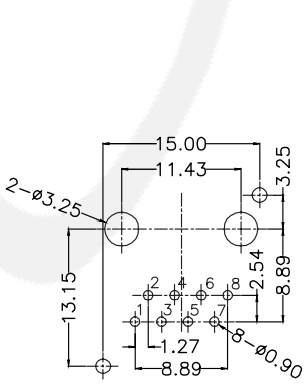

Recommended PCB Layout
(PCB TOLERANCE ±0.05)

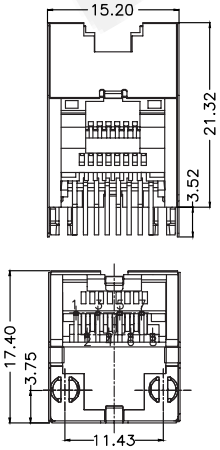

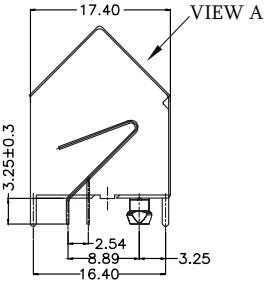

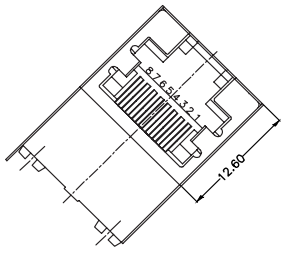

VIEW A

ORDER INFORMATION

5	R	J	1	D	D	1	0	N	0	N	-	8	8	S	A	0	0	L	-	52C	-	R	1
						1:Non Panel Ground				N:W/O Ear		Number of Positions 8:8 Positions	Number of Contacts 8:8 Contacts		SA:Selective Au 6u"			L:RoHS+PBT+Tray		Series No.			

Modular Jack Shielded Side Entry 2×4 Port With LED H=25.4 W=28.15

Specifications
Current Rating: 1.5 AMP
Insulation Resistance: 500mΩ Min.
Contact Resistance: 30mΩ Max.
Dielectric Voltage: 1000V AC for one minute
Operating Temperature: -40°C to +85°C

Material
Housing: LCP, UL94V-0, Black
Terminal: Phosphor Bronze,T=0.46mm
Shield: C2680, T=0.20mm, 20 Min Nickel Plating

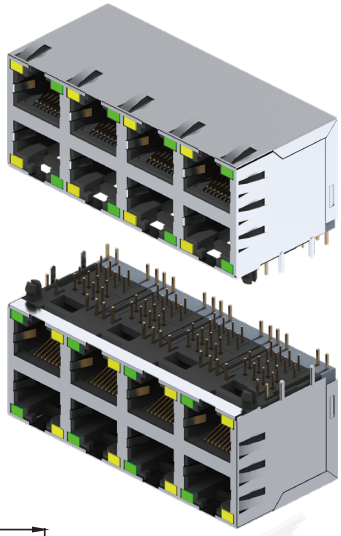

LED Specification

Standard LED Color	LED Wavelength	Forward (A)	Forward (V)
Green	568nm	20mA	1.8~2.8V
Yellow	585nm	20mA	1.8~2.8V

LED Color Options Table

No.	Left(LED1)	Right(LED2)
1	Yellow	Green
2	Yellow	Yellow
3	Green	Yellow
4	Green	Green

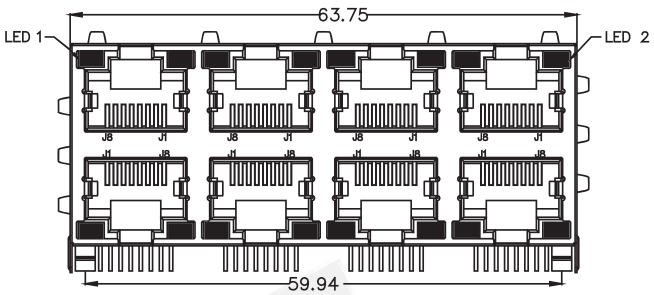

Front View

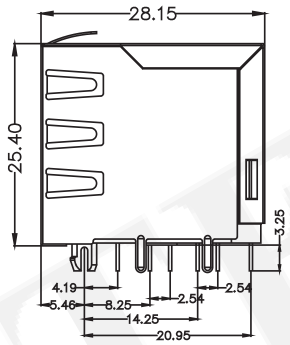

Right Side View

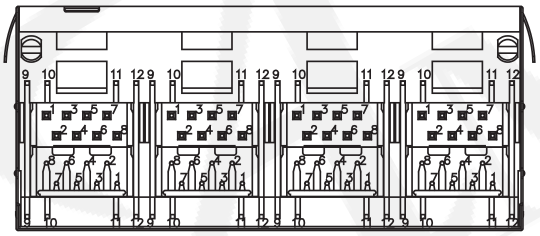
Bottom View

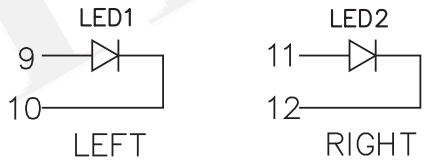

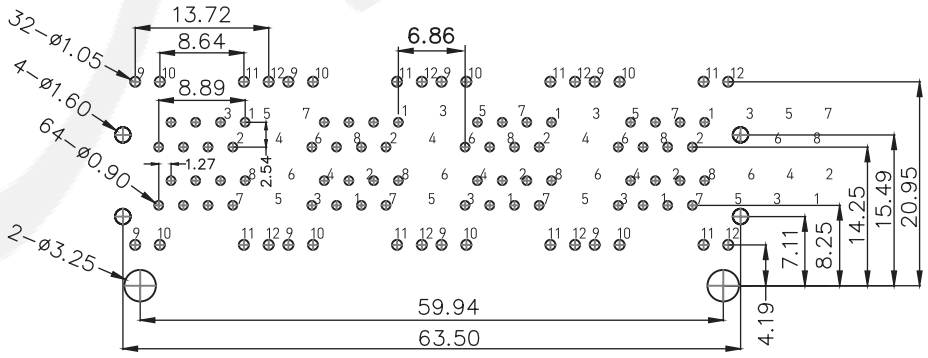

Recommended PCB Layout
(PCB TOLERANCE ±0.05)

ORDER INFORMATION

5	R	J	D	D	R	2	0	R	A	N	-	8	8	G	A	P	1	L	-	592	-	R	1

- D: D:2x4 Port
- N: N:W/O Ear
- 8 (Number of Positions): 8:8 Positions
- 8 (Number of Contacts): 8:8 Contacts
- GA: GA:Au 6u"
- P: P:Parallel Pin
- L: L:RoHS+PBT+Tray
- 592: Series No.

Transformer Modular Jack Shielded Side Entry 1×1 Port With LED H=13.45 W=21.1

Specifications
Current Rating: 1.5 ADC / Contact
Voltage Rating: 125VAC / Contact
Operating Temperature: -40°C to +85°C

Material
Housing: PBT, UL94V-0, Black
Terminals Bracket: PBT, UL94V-0, Black
Shield: C2680, T=0.20mm,
Nickel Plating On All Area
Terminal: Phosphor Bronze C5210, T=0.35mm

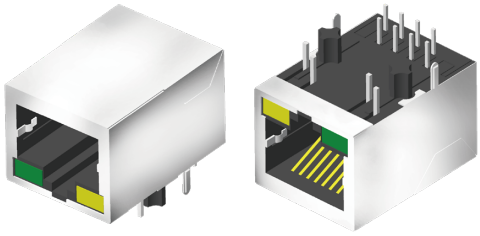

LED Specification

Standard LED Color	LED Wavelength	Forward (A)	Forward (V)
Green	568nm	20mA	1.85~2.45V
Yellow	585nm	20mA	1.7~2.2V

LED Color Options Table

No.	Left(LED1)	Right(LED2)
1	Yellow	Green
2	Yellow	Yellow
3	Green	Yellow
4	Green	Green

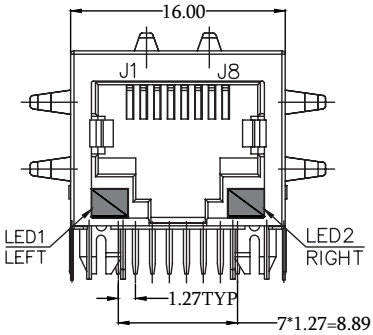

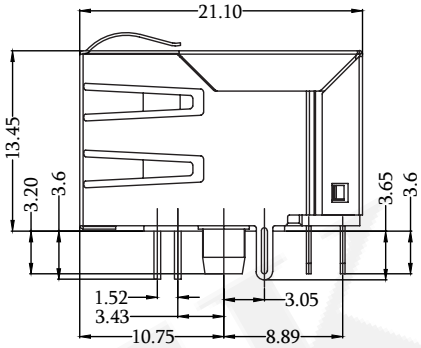

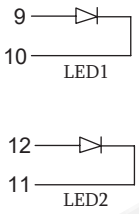

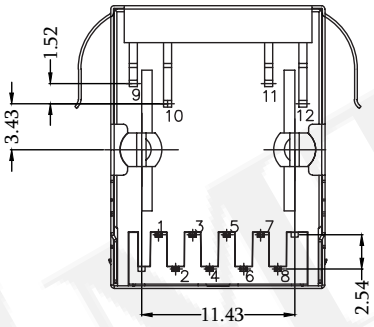

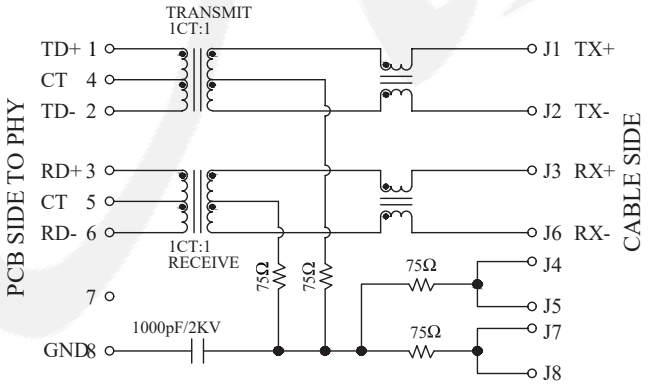

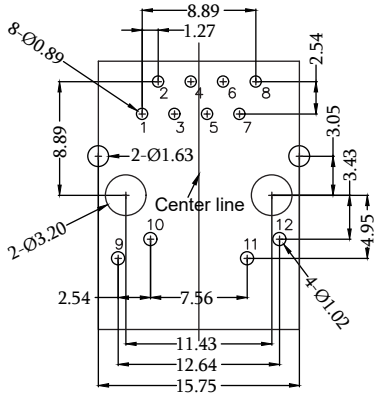

Recommended PCB Layout
(PCB TOLERANCE ±0.05)

ORDER INFORMATION

5	R	T	1	D	R	X	0	R	2	N	-	8	8	S	A	S	X	L	-	111	-	R	2

- X: 1:Non Panel Ground; 2:Top & Side Panel Ground
- N: N:W/O Ear
- 8 (1st): Number of Positions — 8:8 Positions
- 8 (2nd): Number of Contacts — 8:8 Contacts
- SA: SA:Selective Au 6u"
- X: LED Color See Table
- L: L:RoHS+PBT+Tray
- 111: Series No.

RoHS

Transformer Modular Jack Shielded Side Entry 1×1 Port With LED H=13.45 W=21.1

Specifications
Current Rating: 1.5 ADC / Contact
Voltage Rating: 125VAC / Contact
Operating Temperature: -40°C to +85°C

Material
Housing: PBT, UL94V-0, Black
Terminals Bracket: PBT, UL94V-0, Black
Shield: C2680, T=0.20mm,
Nickel Plating On All Area
Terminal: Phosphor Bronze C5210, T=0.35mm

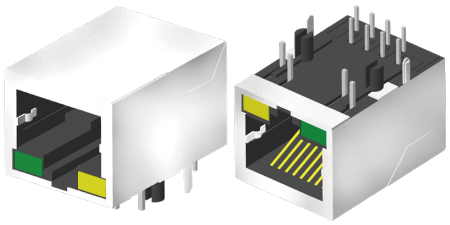

LED Specification

Standard LED Color	LED Wavelength	Forward (A)	Forward (V)
Green	568nm	20mA	1.85~2.45V
Yellow	585nm	20mA	1.7~2.2V

LED Color Options Table

No.	Left(LED1)	Right(LED2)
1	Yellow	Green
2	Yellow	Yellow
3	Green	Yellow
4	Green	Green

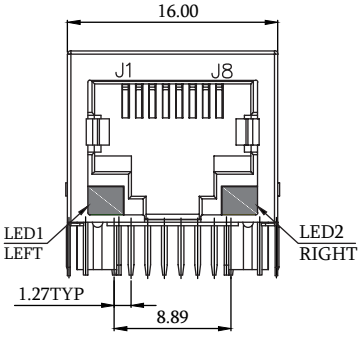

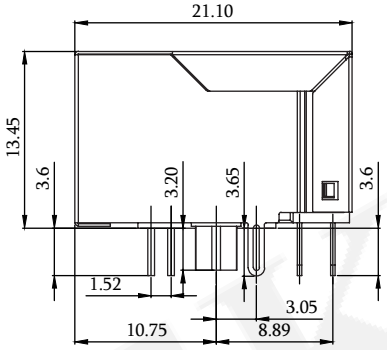

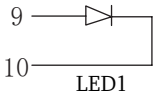

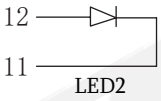

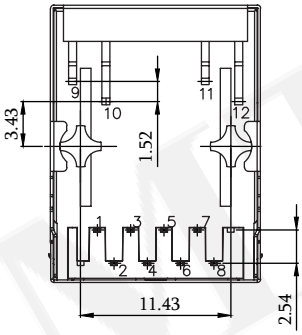

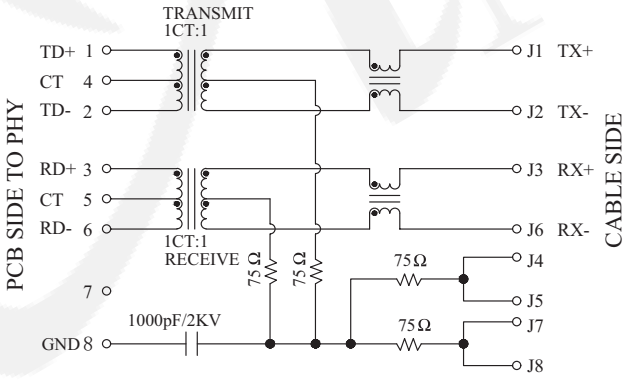

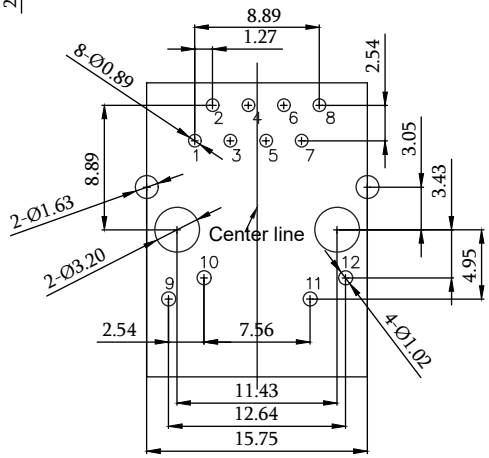

Recommended PCB Layout
(PCB TOLERANCE ±0.05)

ORDER INFORMATION

5	R	T	1	D	R	1	0	R	2	N	-	8	8	S	A	S	X	L	-	111	-	R	L

- 1:Non Panel Ground
- N:W/O Ear
- Number of Positions: 8:8 Positions
- Number of Contacts: 8:8 Contacts
- SA:Selective Au 6u"
- S:Slanting Pin
- LED Color: See Table
- L:RoHS+PBT+Tray
- Series No.

Transformer Modular Jack Shielded Side Entry 1×1 Port With LED H=13.45 W=21.1

Specifications
Current Rating: 1.5 ADC / Contact
Voltage Rating: 125VAC / Contact
Operating Temperature: -40°C to +85°C

Material & Finish
Housing: P.B.T , UL 94V-0, Black
Contact: 0.35mm Phosphor Bronze
Shield: Nickel Plating or All Area, T=0.2mm

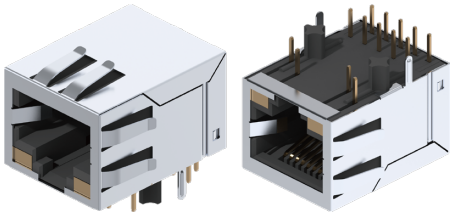

LED Specification

Standard LED Color	LED Wavelength	Forward (A)	Forward (V)
Green	568nm	20mA	1.85~2.45V
Yellow	585nm	20mA	1.7~2.2V

LED Color Options Table

No.	Left(LED1)	Right(LED2)
1	Yellow	Green
2	Yellow	Yellow
3	Green	Yellow
4	Green	Green

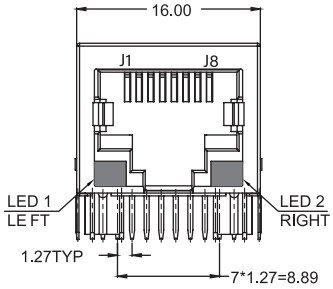

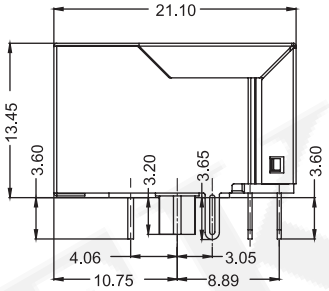

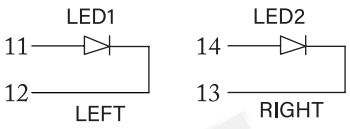

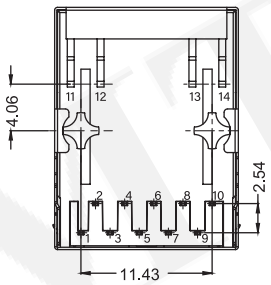

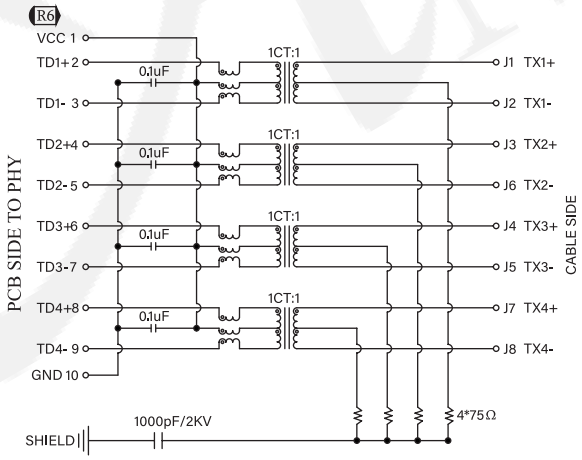

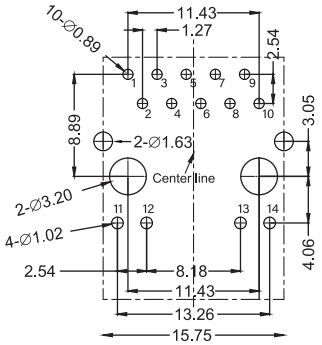

Recommended PCB Layout
(PCB TOLERANCE ±0.05)

ORDER INFORMATION

5	R	T	1	D	R	1	0	R	2	N	-	A	8	S	A	P	3	L	-	111	-	R	6

- N: N:W/O Ear
- A: Number of Positions — A:10 Positions
- 8: Number of Contacts — 8:8 Contacts
- SA: SA:Selective Au 6u"
- P: LED Position — P:Parallel Pin
- 3: LED Options — 3:Left(Green) Right(Yellow)
- L: L:RoHS+PBT+Tray
- 111: Series No.

RoHS

Transformer Modular Jack Shielded Side Entry 1×1 Port With LED H=13.7 W=32.5

Specifications
Current Rating: 1.5 ADC / Contact
Voltage Rating: 125VAC / Contact
Operating Temperature: -40°C to +85°C

Material
Housing: PBT, UL94V-0, Black
Terminals Bracket: PBT, UL94V-0, Black
Shield: C2680, T=0.20mm,
Nickel Plating On All Area
Terminal: Phosphor Bronze T=0.35mm

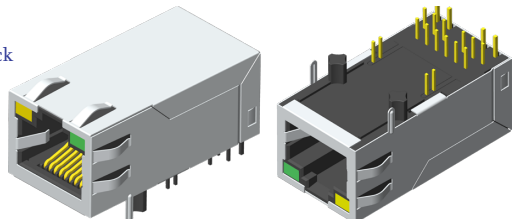

LED Specification

Standard LED Color	LED Wavelength	Forward (A)	Forward (V)
Green	568nm	20mA	1.85~2.45V
Yellow	585nm	20mA	1.7~2.2V

LED Color Options Table

No.	Left(LED1)	Right(LED2)
1	Yellow	Green
2	Yellow	Yellow
3	Green	Yellow
4	Green	Green

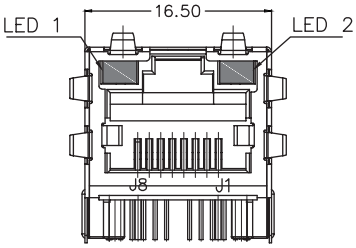

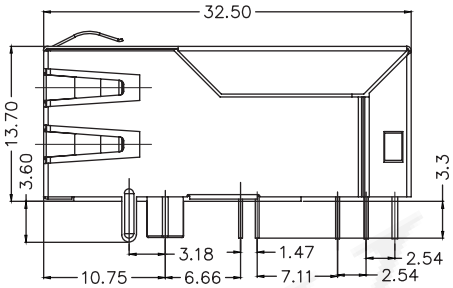

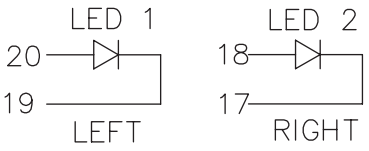

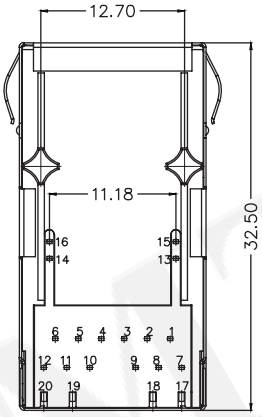

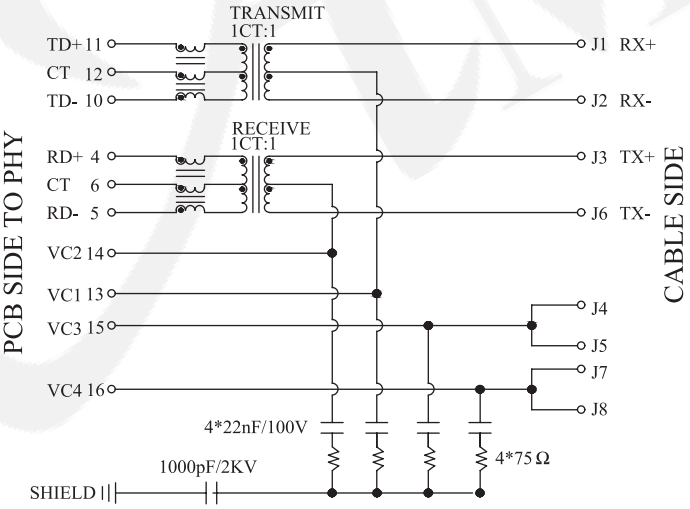

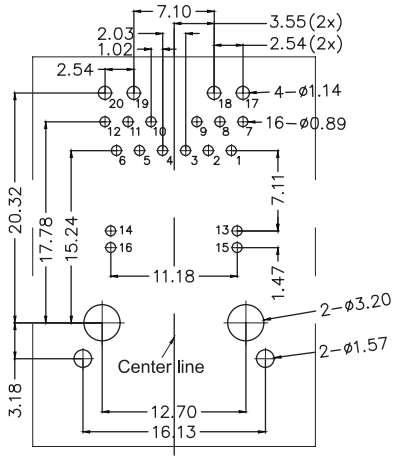

Recommended PCB Layout
(PCB TOLERANCE ±0.05)

ORDER INFORMATION

5	R	T	1	D	R	2	0	F	3	N	-	B	8	S	A	P	X	L	-	411	-	R	1

- 2: 2:Top & Side Panel Ground
- N: N:W/O Ear
- SA: SA:Selective Au 6u"
- X: LED Color See Table
- L: L:RoHS+PBT+Tray
- 411: Series No.

Transformer Modular Jack Shielded Side Entry 1×2 Port With LED H=13.55 W=21.1

Specifications
Current Rating: 1.5 ADC / Contact
Voltage Rating: 125VAC / Contact
Operating Temperature: -40°C to +85°C

Material
Housing: PBT, UL94V-0, Black
Terminals Bracket: PBT, UL94V-0, Black
Shield: C2680, T=0.20mm, Nickel Plating On All Area
Terminal: Phosphor Bronze C5210, T=0.35mm

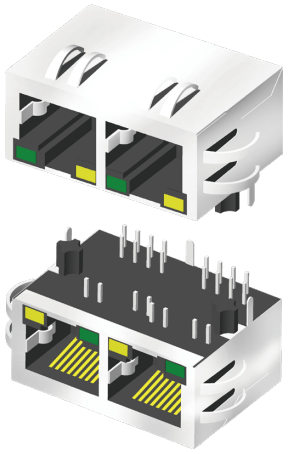

LED Specification

Standard LED Color	LED Wavelength	Forward (A)	Forward (V)
Green	568nm	20mA	1.85~2.45V
Yellow	585nm	20mA	1.7~2.2V

LED Color Options Table

No.	Left(LED1)	Right(LED2)
1	Yellow	Green
2	Yellow	Yellow
3	Green	Yellow
4	Green	Green

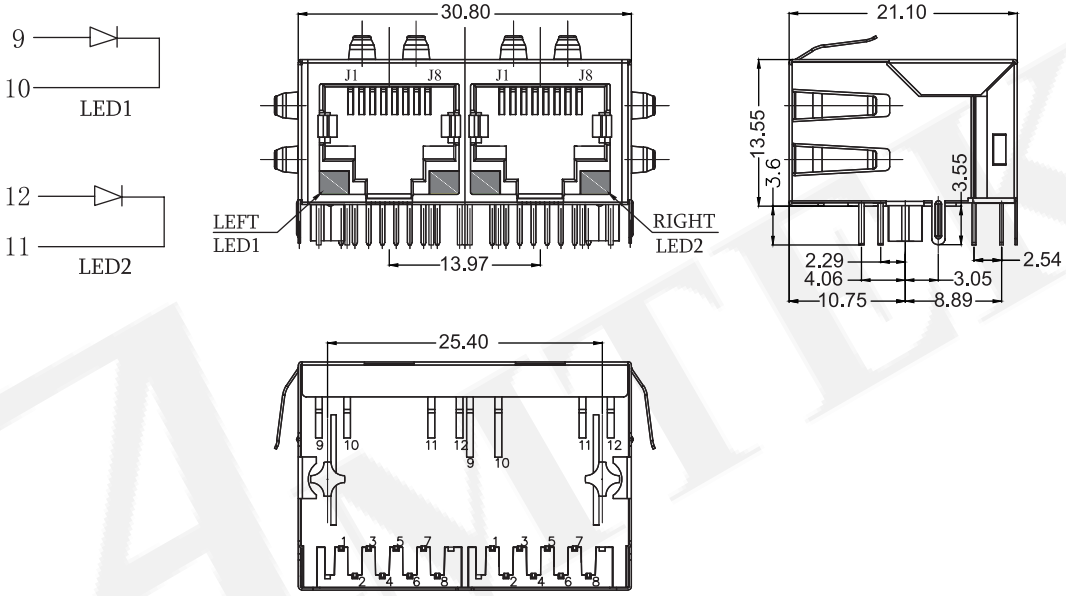

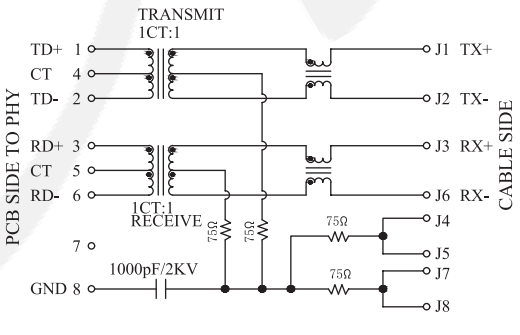

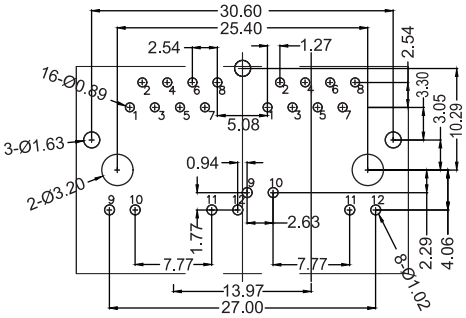

Recommended PCB Layout
(PCB TOLERANCE ±0.05)

ORDER INFORMATION

5 R T 2 D R 2 1 R 2 N - 8 8 X X P X L - 112 - R 1

- 2: 2:Top & Side Panel Ground
- N: N:W/O Ear
- XX: SA:Selective Au 6u" / SD:Selective Au 30u"
- X: LED Color See Table
- L: L:RoHS+PBT+Tray
- 112: Series No.

RoHS

Transformer Modular Jack Shielded Side Entry 2×4 Port With LED H=25.5 W=41.53

Specifications
Current Rating: 1.5 ADC / Contact
Voltage Rating: 125VAC / Contact
Operating Temperature: -40°C to +85°C

Material
Housing: PBT, UL94V-0, Black
Terminals Bracket: PBT, UL94V-0, Black
Shield: C2680, T=0.20mm, Nickel Plating On All Area
Terminal: Phosphor Bronze C5191, T=0.35mm

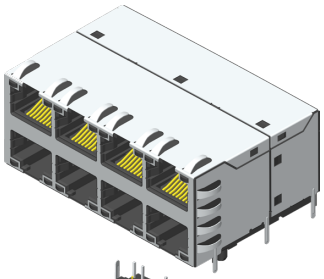

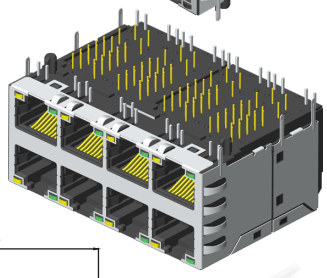

LED Specification

Standard LED Color	LED Wavelength	Forward (A)	Forward (V)
Green	568nm	20mA	2.2~2.4V
Yellow	585nm	20mA	2.1~2.5V

LED Color Options Table

No.	Left(LED1)	Right(LED2)
1	Yellow	Green
2	Yellow	Yellow
3	Green	Yellow
4	Green	Green

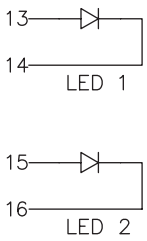

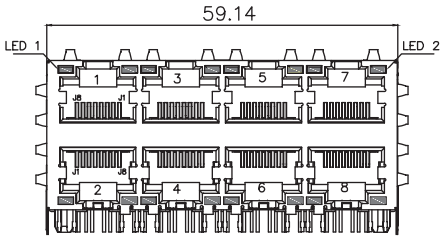

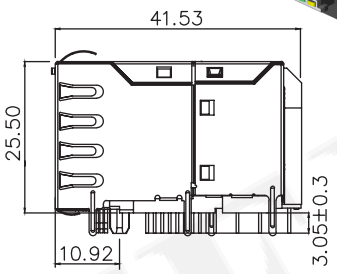

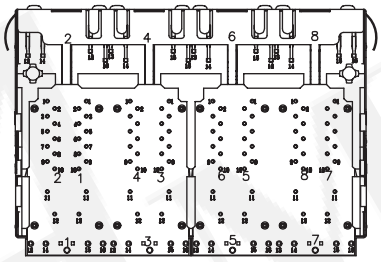

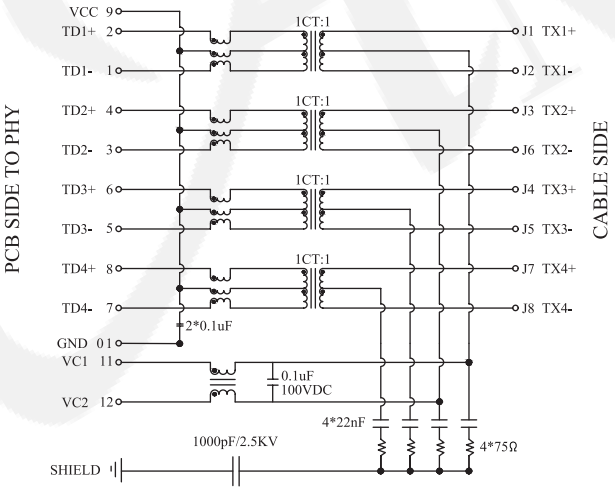

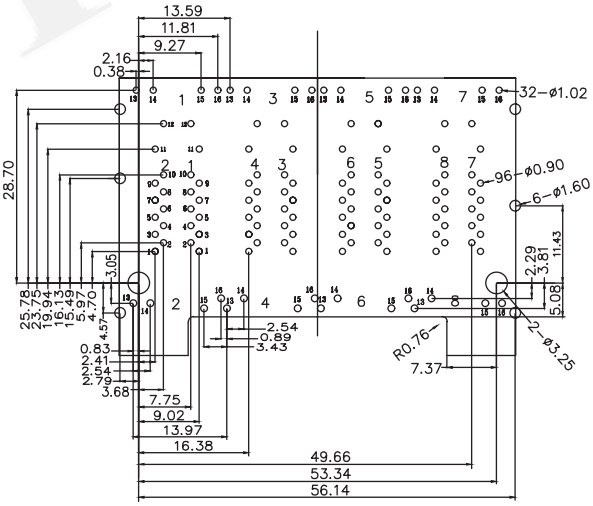

Recommended PCB Layout
(PCB TOLERANCE ±0.05)

ORDER INFORMATION

5	R	T	D	D	R	5	0	N	0	N	-	B	8	S	D	P	X	L	-	447	-	R	1

- N: N:W/O Ear
- B: Number of Positions — B:12 Positions
- 8: Number of Contacts — 8:8 Contacts
- SD: SD:Selective Au 30u"
- X: LED Color See Table
- L: L:RoHS+PBT+Tray
- 447: Series No.

AMTEK

CONNECTORS MANUFACTURER

SFP+ Series

8-35 SFP+ 1×1 Connector

8-36 SFP+ 1×1 Cage Solder

8-37 SFP+ 1×1 Cage Press Fit With Heat Sink

8-38 SFP+ 1×4 Cage

8-39 SFP+ 1×6 Cage Standard Layout

8-41 SFP+ 2×1 With Light Pipe

8-43 SFP+ 2×4 Connector

SFP+ 1×1 Connector

Specifications

Contact Rating : 0.5A
Contact Resistance: 20mΩ Max.
Dielectric Voltage: 300V for one minute
Operation Temperature: -40°C to +85°C
Durability: 100 Cycle Min

Material

Insulator: LCP, UL 94V-0, Black
Contact Pin: Copper Alloy

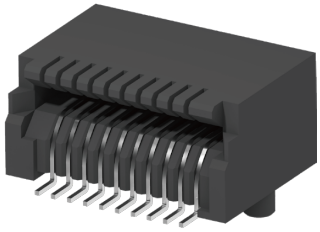

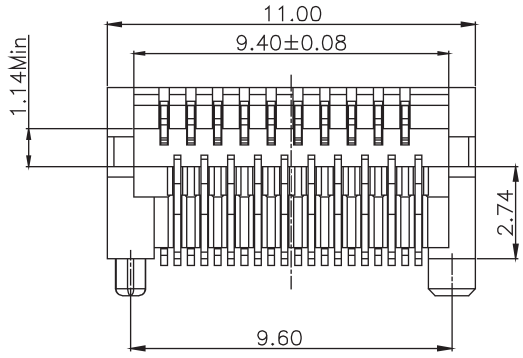

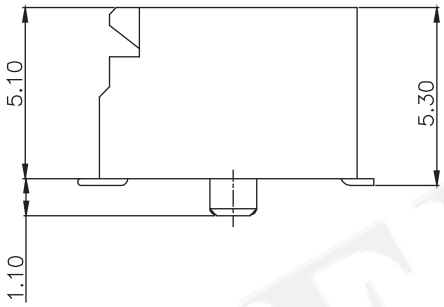

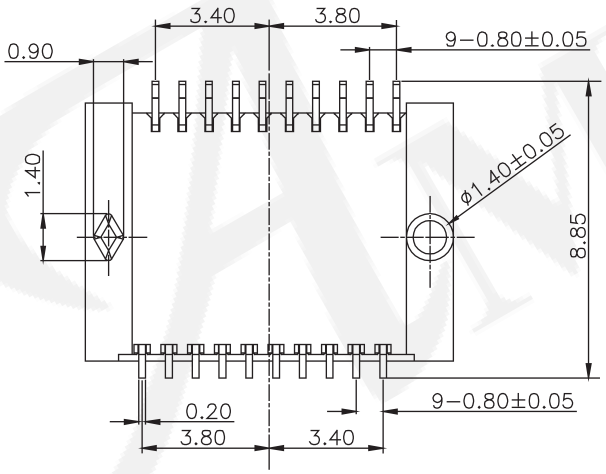

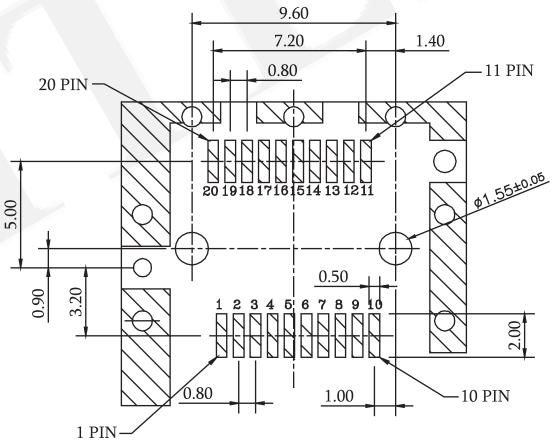

Recommended PCB Layout
(PCB TOLERANCE ±0.05)

ORDER INFORMATION

5	H	S	P	2	0	1	-	S	F	N	H	-	0	1

SF:Selective 15u"

H:Tape & Reel, W/O Cap

SFP+ 1×1 Shielding Cage Solder

Specifications
Operation Temperature: -40°C to +85°C

Material
SFP Cage: Copper Alloy
EMI Spring: Copper Alloy

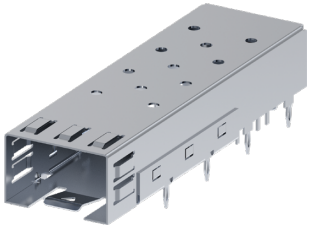

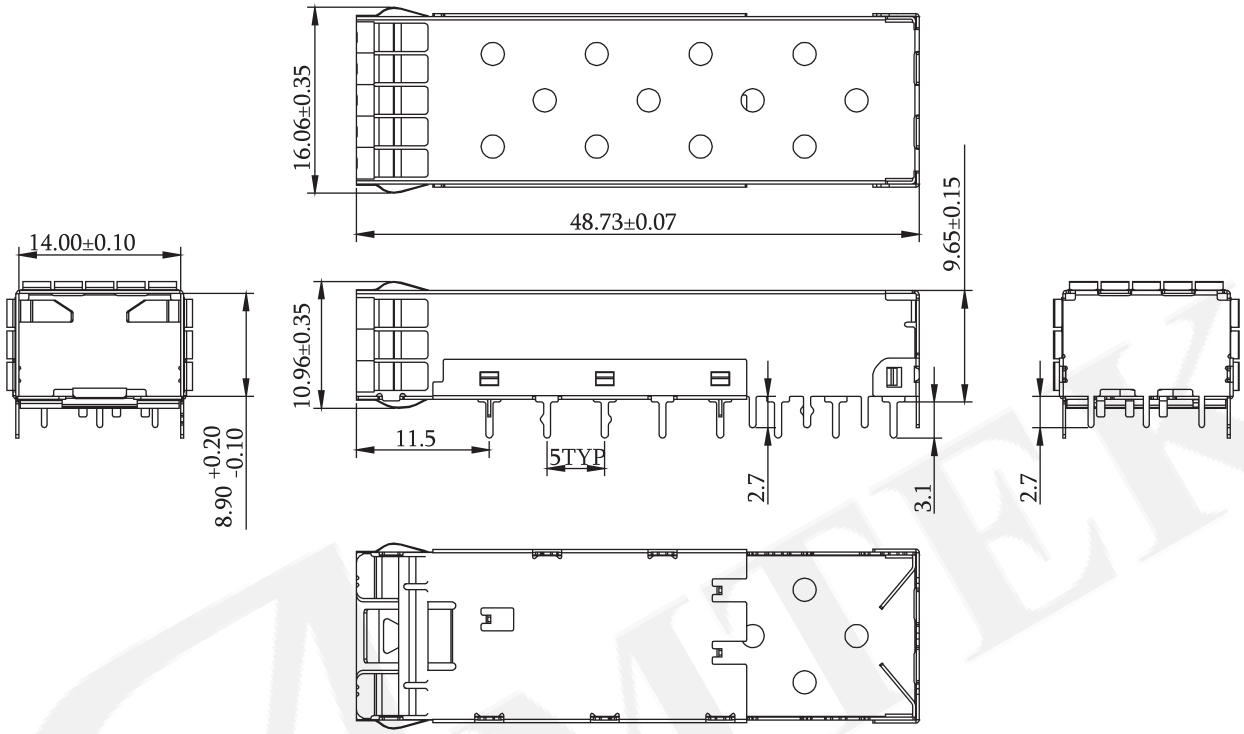

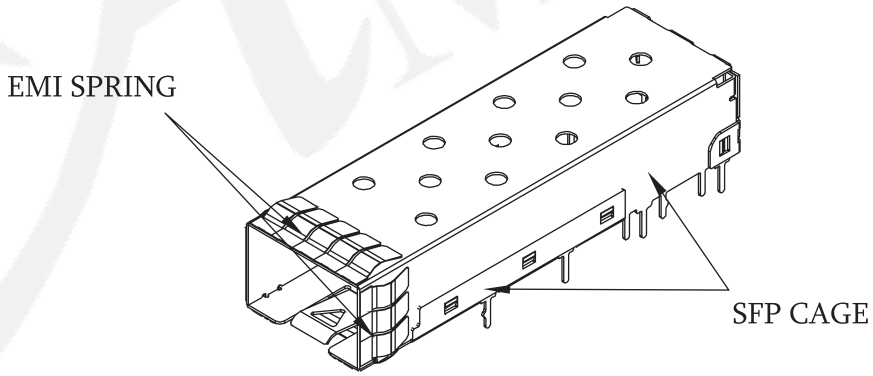

ORDER INFORMATION

5	H	S	P	C	0	2	-	1	1	N	M	N	X	X	X	-	0	1

- 1×1 Port
- M: Metal EMI
- NN:No Plating
  NI: Nickel Plating
- X: Box

SFP+ 1×1 Shielding Cage Press Fit With Heat Sink

Specifications

Operation Temperature: -40°C to +85°C

Material

SFP Cage: Copper Alloy
EMI Spring: Copper Alloy
Heat Sink: Aluminum
Heat Sink Clip: Stainless Steel
Lighte Pipe: PC Color: Clear

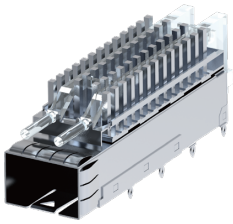

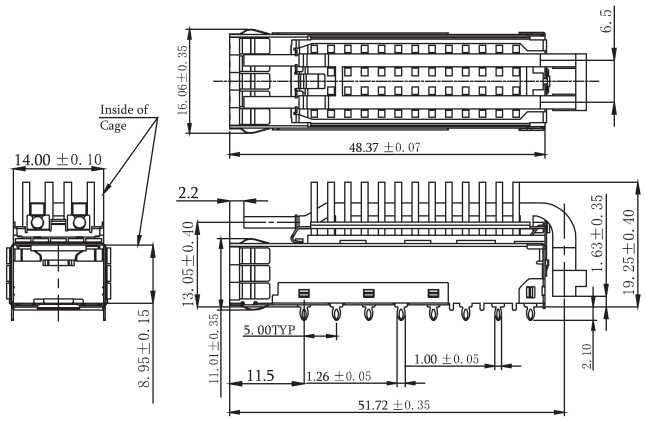

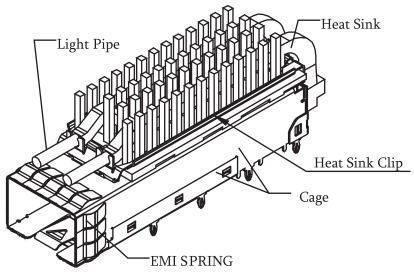

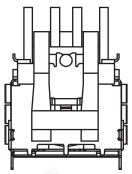

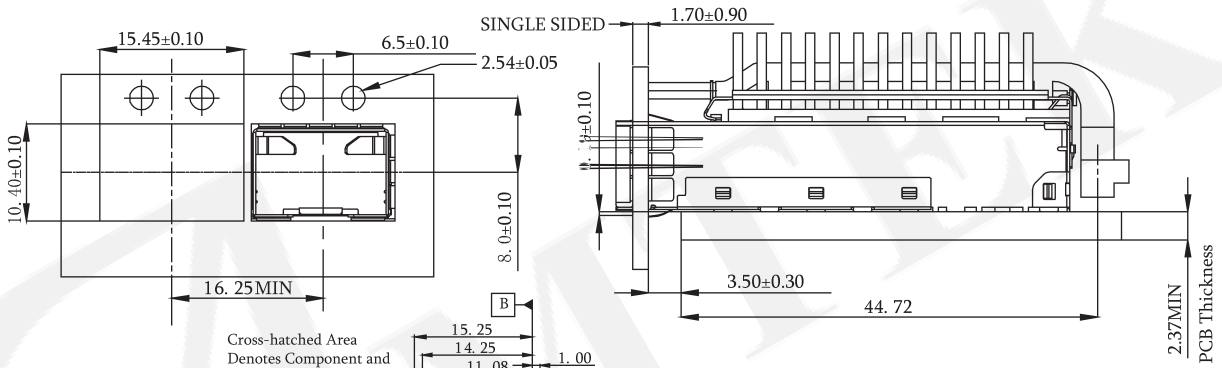

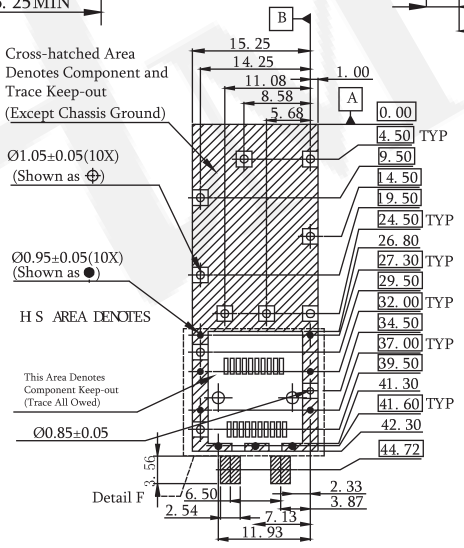

Recommended PCB Layout
(PCB TOLERANCE ±0.05)

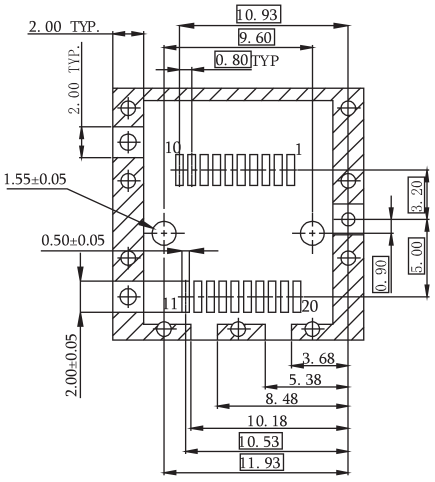

Detail F

ORDER INFORMATION

5	H	S	P	C	0	2	-	1	1	1	M	P	N	I	X	-	0	2

- 1×1 Port
- M: Metal EMI
- P: Pin Type
- NI: Nickel Plating
- X: Box

SFP+ 1×4 Shielding Cage

Specifications
Operation Temperature: -40°C to +85°C

Material
SFP Cage: Copper Alloy
EMI Spring: Copper Alloy
Heat Sink: Aluminum
Heat Sink Clip: Stainless Steel

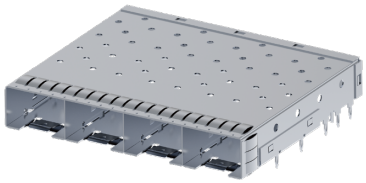

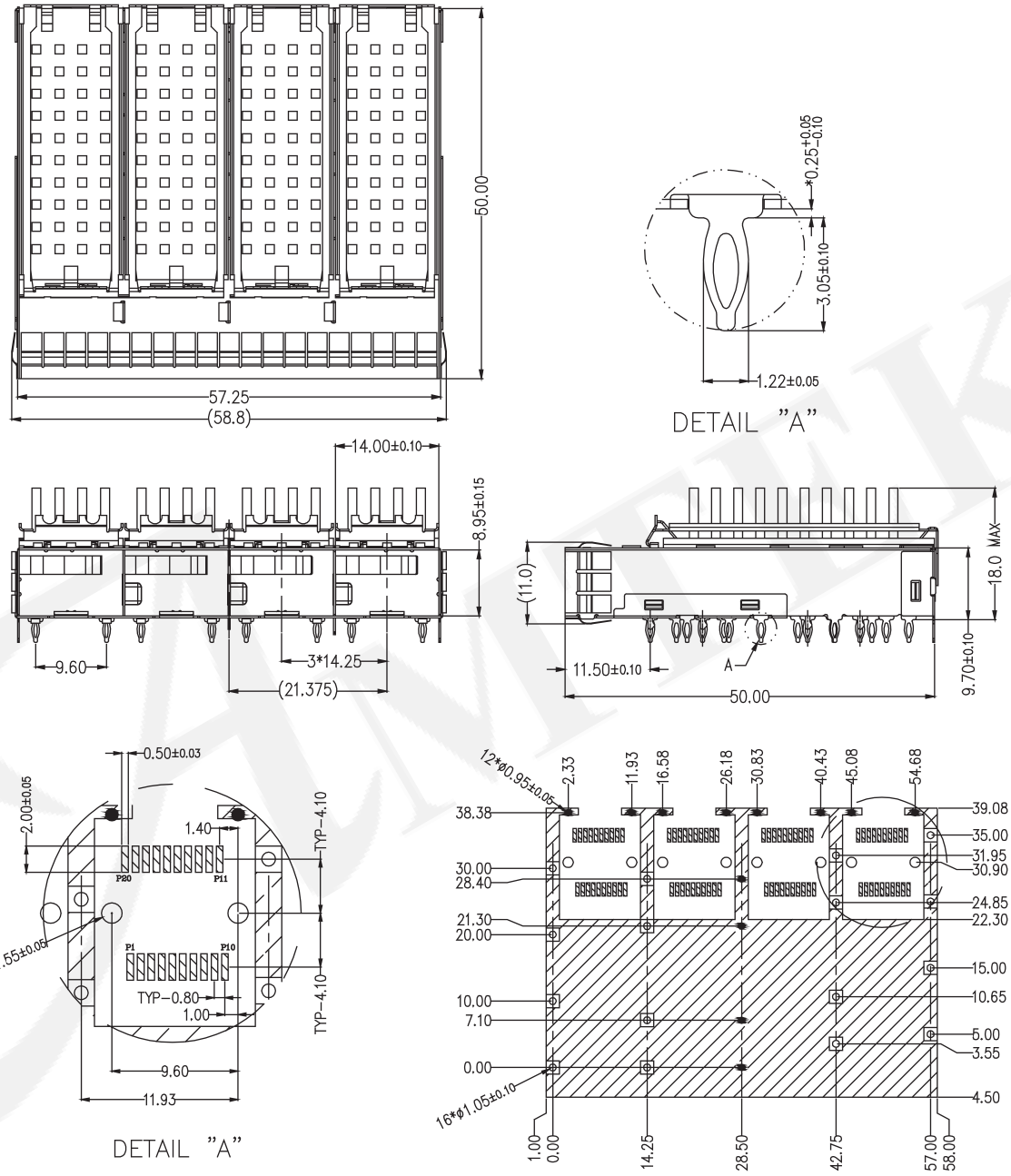

ORDER INFORMATION

5	H	S	P	C	0	2	-	1	4	N	M	P	N	I	X	-	0	2

- 14: 1×4 Port
- M: Metal EMI
- P: Pin Type
- NI: Nickel Plating
- X: Box

SFP+ 1×6 Shielding Cage Standard Layout

Specifications

Operation Temperature: -40°C to +85°C

Material

Cage: Copper Alloy

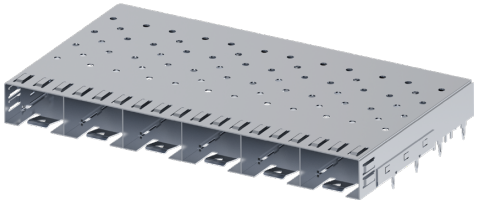

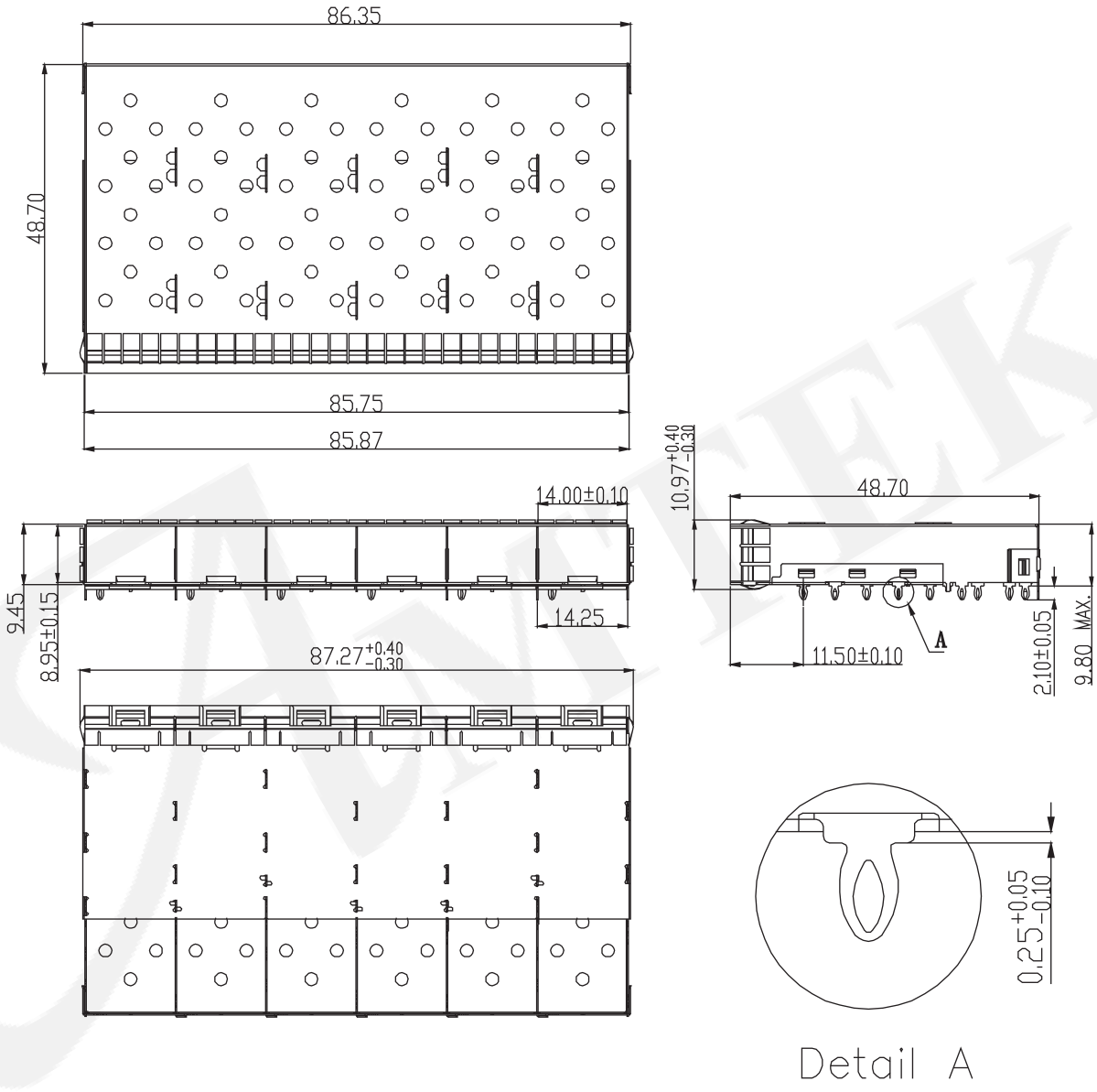

ORDER INFORMATION

5	H	S	P	C	0	2	-	1	6	N	M	N	N	I	X	-	0	1
								1×6 Port			M: Metal EMI			NI: Nickel Plating		X: Box			

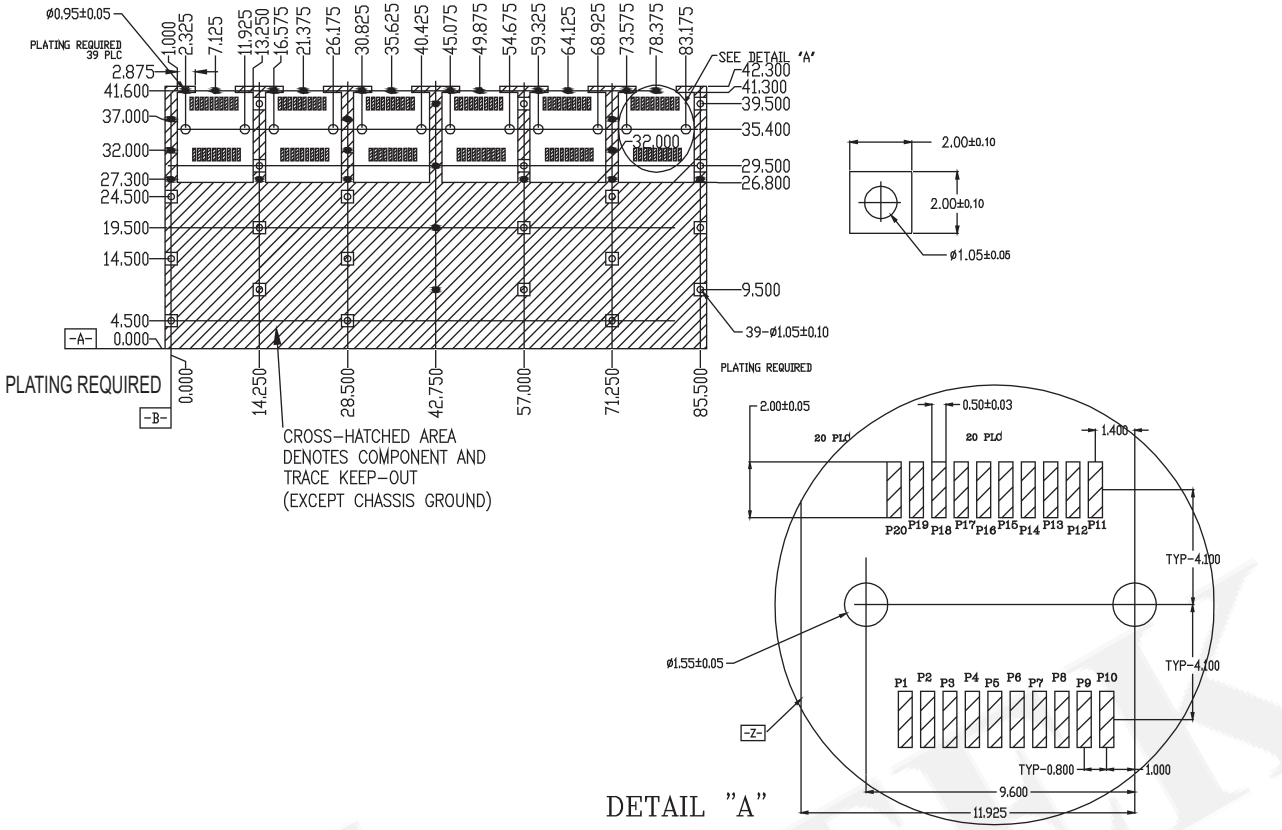

RECOMMENDED PCB CONFIGURATION WITH KEEP-OUT AREAS
SINGLE SIDED APPLICATONS

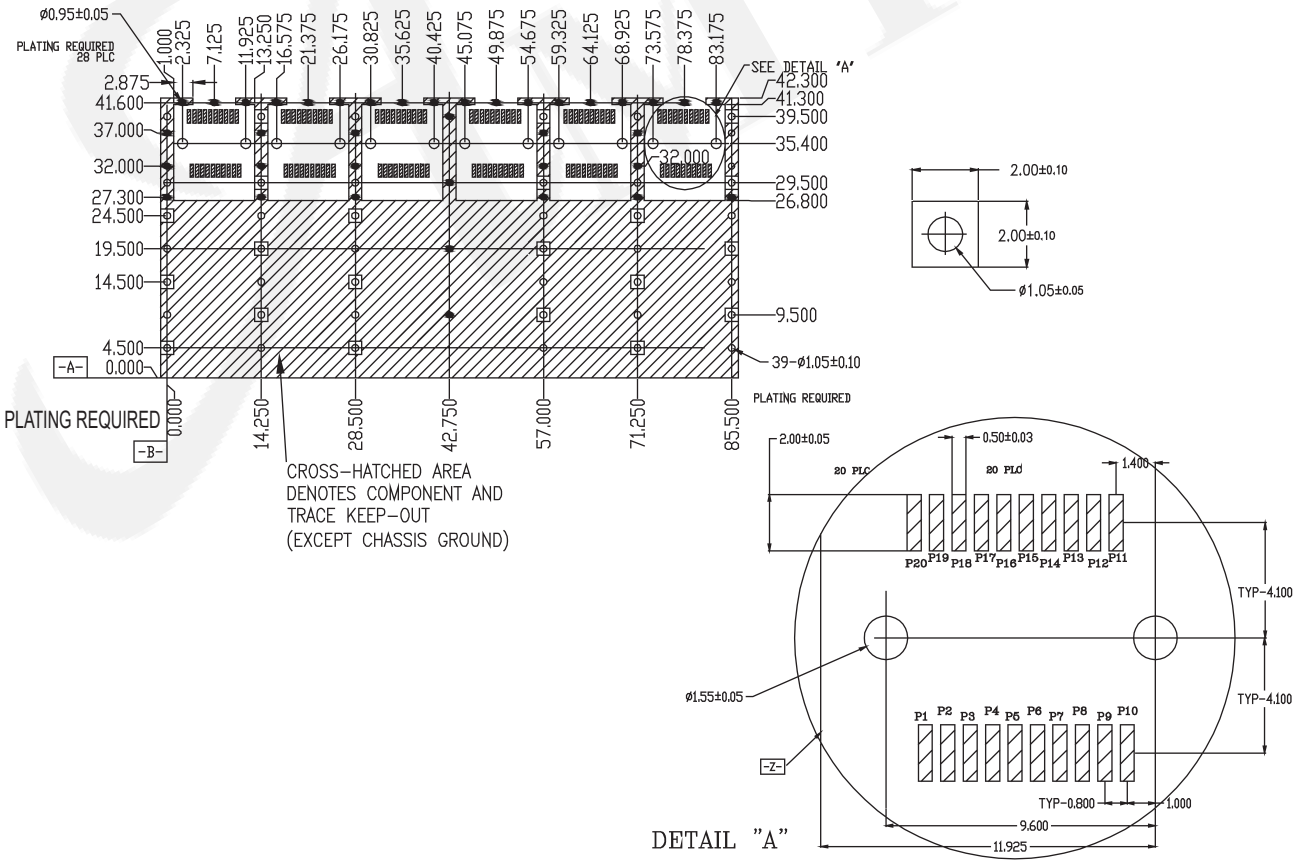

RECOMMENDED PCB CONFIGURATION WITH KEEP-OUT AREAS
BFLLY TO BFLLY APPLICATONS

SFP+ 2×1 With Light Pipe

Specifications

Ratings Current: 0.5AMPS Max
Withstanding Voltage: 300V AC/Max
Ratings Voltage: 30 volt AC
Operation Temperature: -40°C to +85°C
Insulation Resistance: 1000MΩ Min

Material

Insulator: LCP, UL 94V-0, Black
Contact Pin: Phosphor Bronze
Cage: Copper Alloy
Light Pipes: Polycarbonate, UL 94V-0, Clear
Light Pipe Housing: PBT UL 94V-0, Black

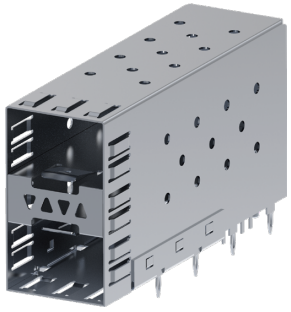

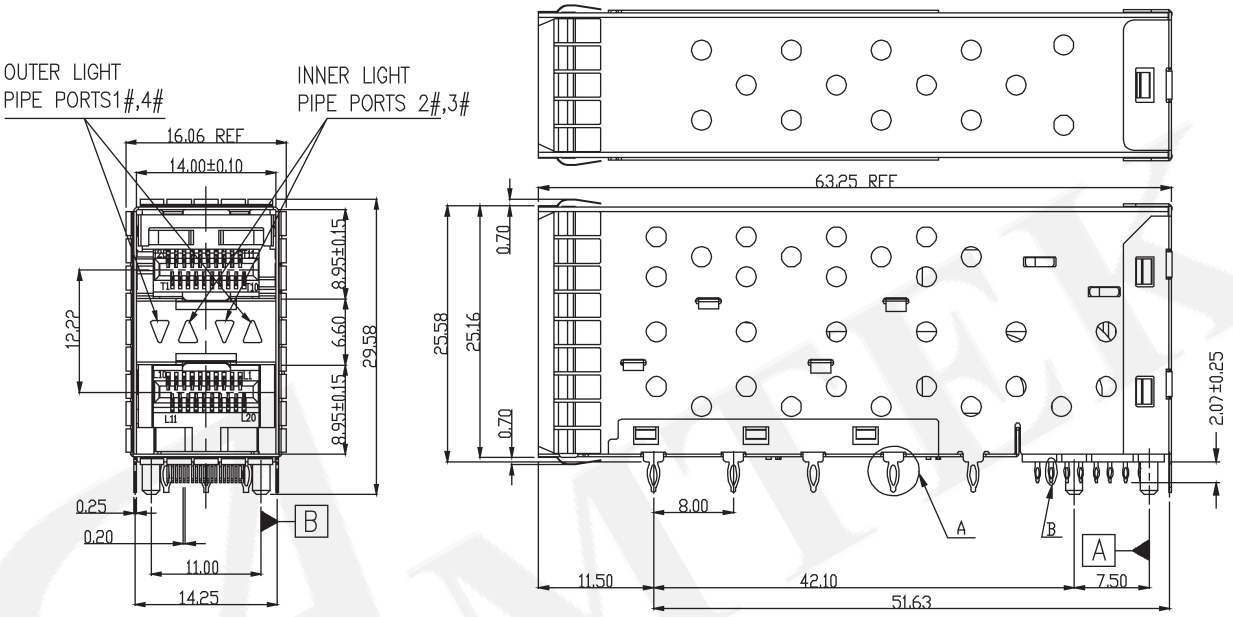

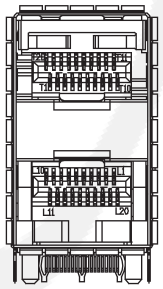

N:W/O Light Pipe

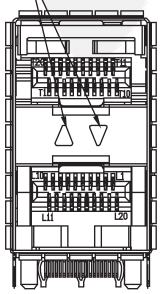

2:Inner

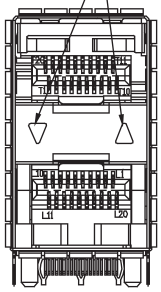

3:Outer

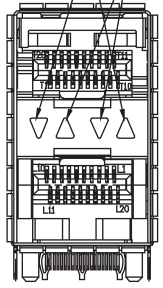

4:Inner+Outer

ORDER INFORMATION

5	H	S	P	2	0	2	-	2	1	X	N	M	X	X	X	-	0	1

- 2×1 Port
- N:W/O Light Pipe / 2:Inner / 3:Outer / 4:Inner+Outer
- M: Metal EMI
- SF Selective 15u" / SD:Selective 30u" / S5: Selective 50u"
- X: Box

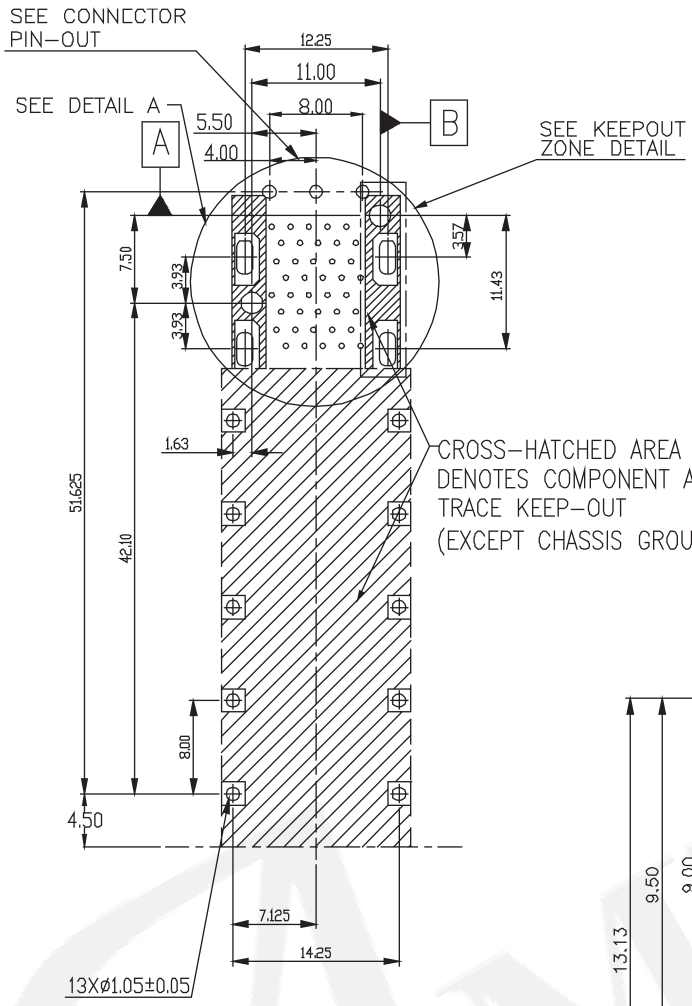

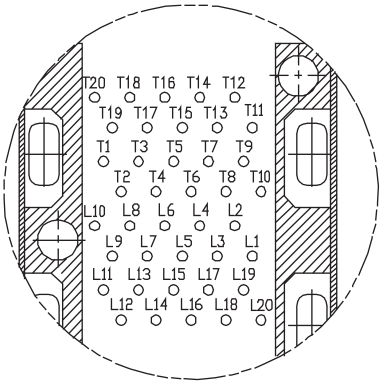

CONNECTOR PIN-OUT
COMPONENT SIDE OF BOARD

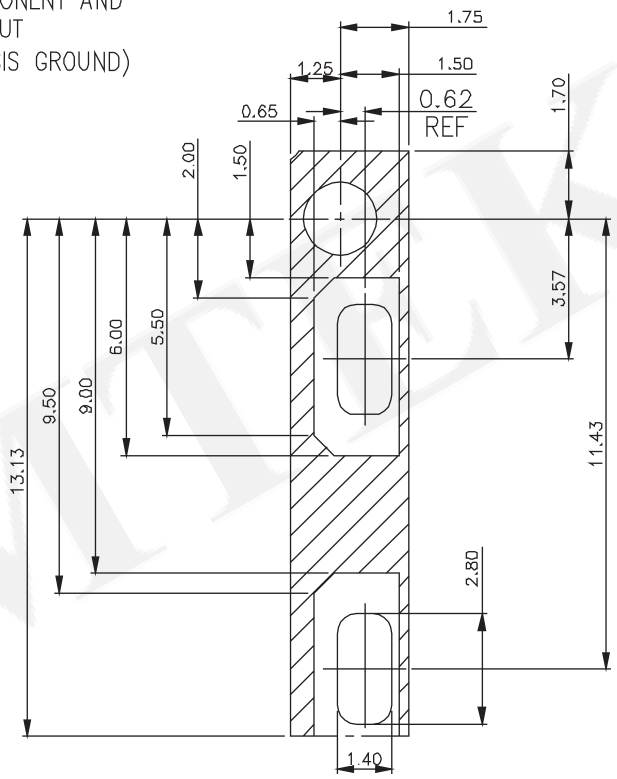

KEEPOUT ZONE DETAIL

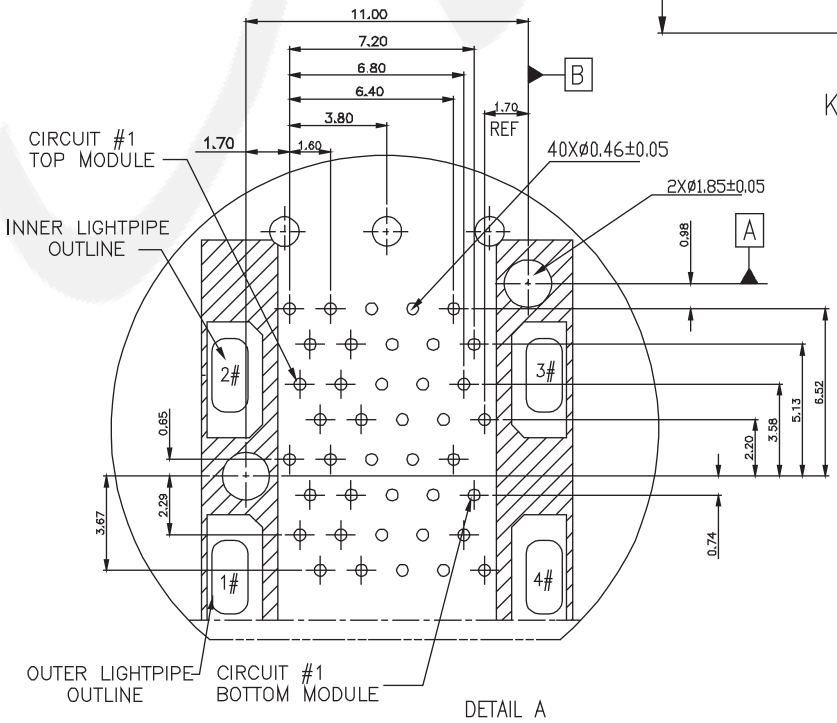

DETAIL A

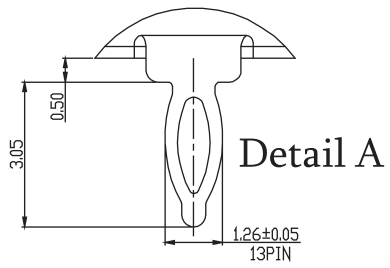

Detail A

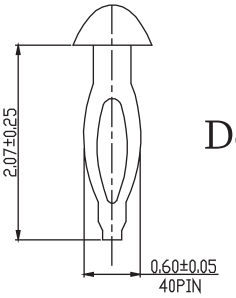

Detail B

SFP+ 2×4 Connector

Specifications

Ratings Current: 0.5 AMPS MAX
Ratings Voltage: 30 volt DC/AC(RMS) MAX
Withstanding Voltage: 300V AC/Max
Operation Temperature: -40°C to +85°C
Insulation Resistance: 1000MΩ Min

Material

Insulator: LCP, UL 94V-0, Black
Contact Pin: Phosphor Bronze
Cage: Copper Alloy
Light Pipes: Polycarbonate, UL 94V-0, Clear
Light Pipe Housing: PBT UL 94V-0, Black
EMI Spring: Copper Alloy

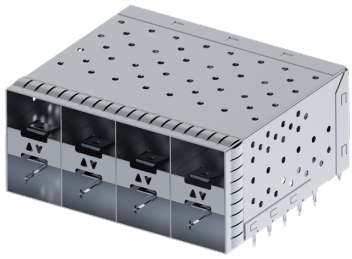

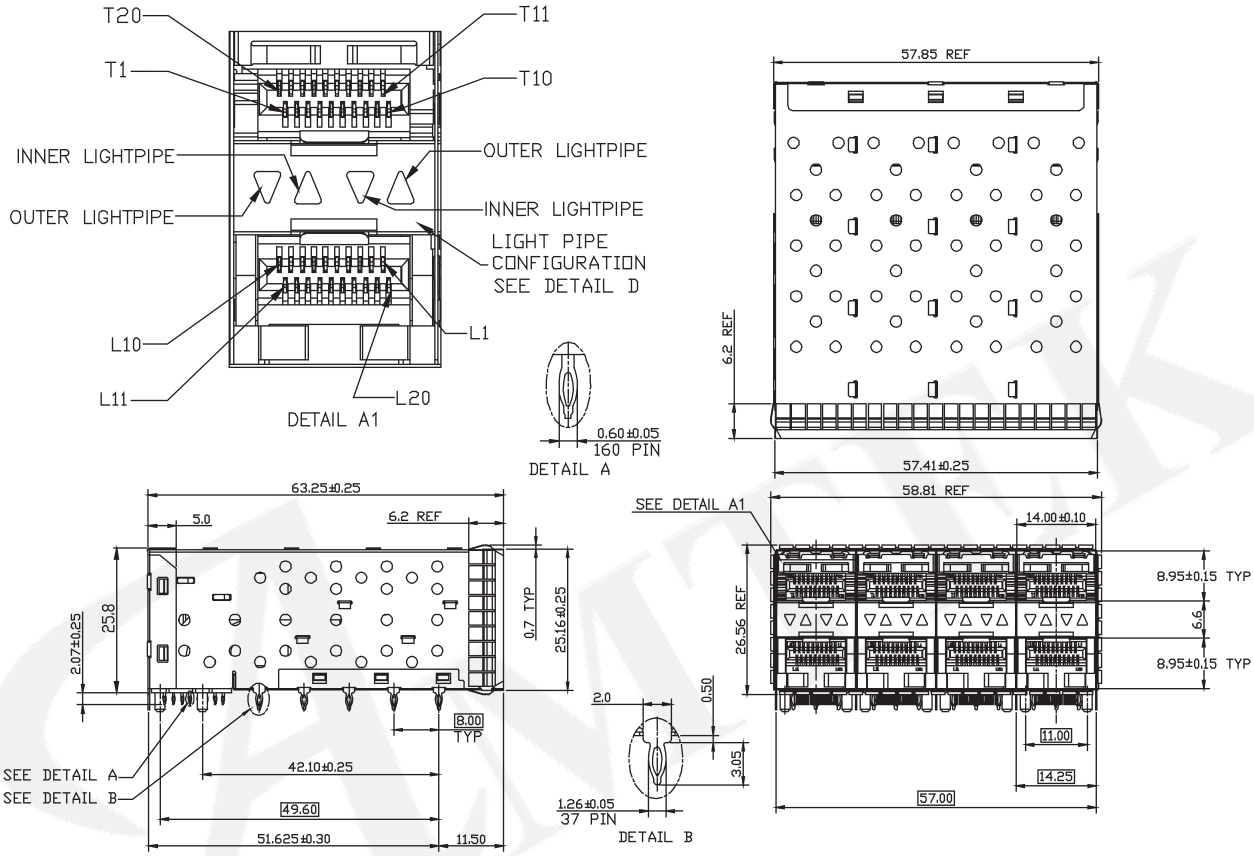

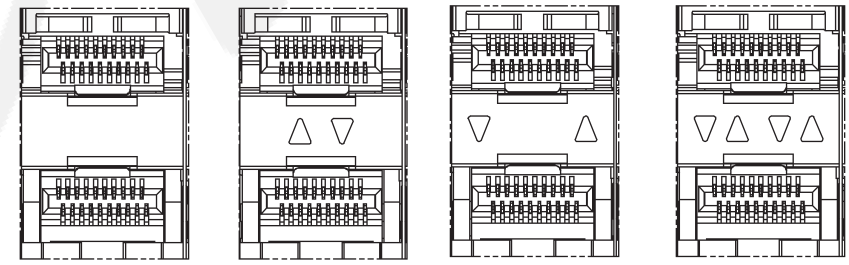

N:W/o Light Pipe 2:Inner 3:Outer 4:Inner+outer

LIGHT PIPE CONFIGURATION
DETAIL D

ORDER INFORMATION

5	H	S	P	2	0	1	-	2	4	X	N	M	X	X	X	-	0	1

- 24: 2×4 Port
- X: N:W/O Light Pipe; 2:Inner; 3:Outer; 4:Inner+Outer
- M: Metal EMI
- XX: SF Selective 15u"; SD:Selective 30u"; S5: Selective 50u"
- X: X: Box

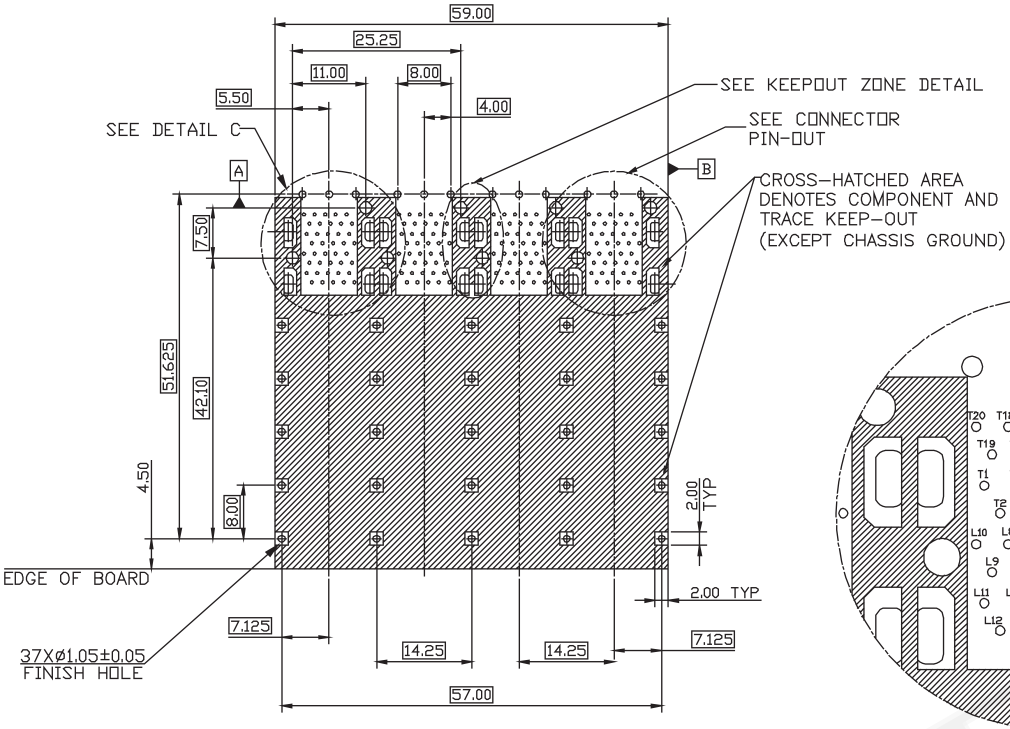

RECOMMENDED PCB LAYOUT-COMPONENT SIDE
RECOMMENDED PCB THICKNESS-2.63 MM

THE ENTIRE AREA OF THE CONNECTOR FOOTPRINT TO BE CONSIDERED THE KEEP OUT AREA FOR COMPONENTS (OTHER THAN LIGHT PIPE LED'S) THIS AREA IS INDICATED BY THE DASHED LINE

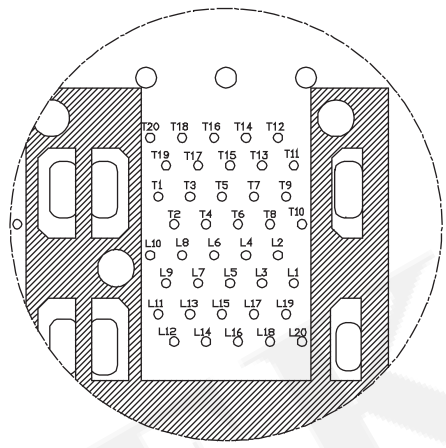

CONNECTOR PIN-OUT
COMPONENT SIDE OF BOARD

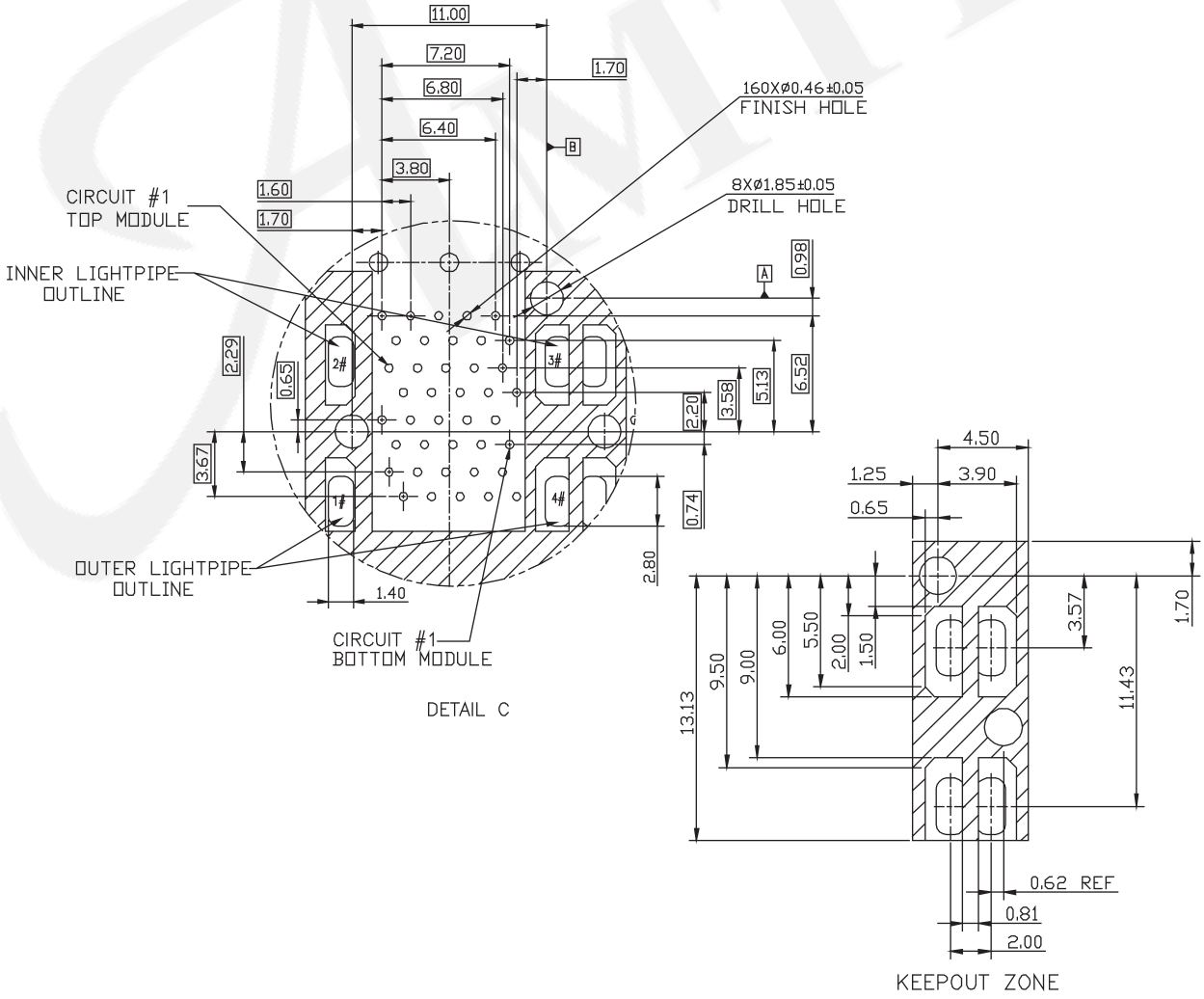

DETAIL C

KEEPOUT ZONE

糧德精密有限公司
Amtek Technology Co., Ltd

Tel : +886-2-2260-6878 Fax : +886-2-2260-7177
E-mail : web@amtek-co.com.tw
https://www.amtek-co.com.tw
Add : No.3, Ln. 33, Rixin St., Tucheng Dist.,
New Taipei City 23666, Taiwan
新北市土城區日新街33巷3號

IATF 16949:2016

ISO 9001:2015

ISO 14001:2015

ISO 14064-1:2018

ECBT2-E322618

XCFR2-E346158