USB
Connectors

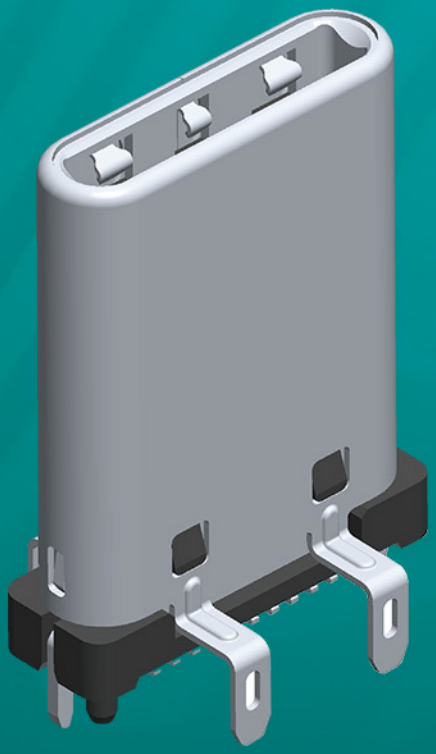

www.amtek-co.com.tw

3D Interactive Catalogue online

USB Connectors

6-1 ~ 6-10 • **USB 3.1 Type C**

6-11 • **Mini &Micro USB**

6-12 ~ 6-21 • **USB**

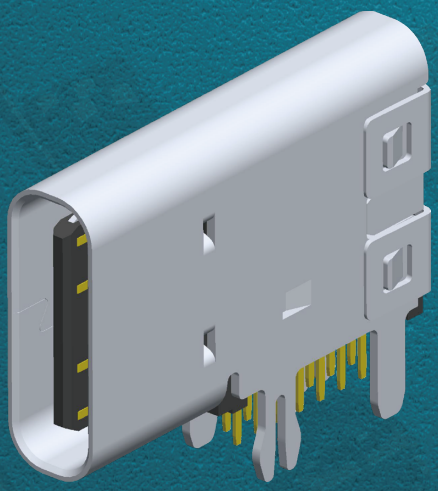

USB Connectors

USB 3.1 Type C

NEW 6-1 USB 4.0 Type C Female SMT R/A Sink Type 24P
HOT 6-1 USB 3.1 Type C Female SMT R/A Type 24P
HOT 6-2 USB 3.1 Type C Female SMT R/A Type 16P
6-2 USB 3.1 Type C Female SMT R/A Type 16P
6-3 USB 3.1 Type C Female SMT R/A Type 16P
HOT 6-3 USB 3.1 Type C Female SMT R/A Waterproof Type 16P
HOT 6-4 USB 3.1 Type C Female SMT R/A Sink Type 16P
6-4 USB 3.1 Type C Female SMT R/A Sink Type 16P
HOT 6-5 USB 3.1 Type C Female SMT R/A Sink Type 24P
6-5 USB 3.1 Type C Female SMT R/A Sink Waterproof Type 24P
6-6 USB 3.1 Type C Female SMT R/A Sink Waterproof Type 24P
6-6 USB 3.1 Type C Female SMT Vertical Type 24P
6-7 USB 3.1 Type C Female DIP Upright Type 14P
6-7 USB 3.1 Type C Female DIP Upright Type 14P
6-8 USB 3.1 Type C Female Straddle Type 24P
6-8 USB 3.1 Type C Female Straddle Type 24P
6-9 USB 3.1 Type C Male Straddle Type 24P
6-9 USB 3.1 Type C Male SMT Vertical Type 24P
6-10 USB 3.1 Type C Male SMT Vertical Type 24P
6-10 USB 3.1 Type C Male Straddle Type 24P

Mini USB & Micro USB

6-11 Mini USB B Type Female SMT R/A Type 5P
6-11 Mini USB B Type Female Dip R/A Type 5P
6-11 Micro USB AB Type Female SMT R/A Type 5P

USB

6-12 USB 2.0+3.2 A Type Female 2 Ports DIP R/A Type 9P
6-12 USB 3.1 A Type Female 2 Ports DIP R/A Type 9P
6-13 USB 3.1 A Type Female 3 Ports & 4 Ports DIP R/A Type 9P
6-14 USB A Type Female DIP R/A Reverse Type 4P
HOT 6-14 USB A Type Female SMT R/A Type 4P
6-14 USB A Type Female SMT R/A Type 4P With Peg
HOT 6-15 USB A Type Female Solder Type 4P
6-15 USB A Type Female DIP Vertical Type 4P
6-15 USB A Type Female DIP Upright Type 4P

USB

6-16 USB A Type Female 2 Ports DIP R/A Type 8P

6-16 USB A Type Female 2 Ports DIP Vertical Type 8P

6-17 USB A Type Female 3 Ports DIP R/A Type 12P

6-17 USB A Type Female 4 Ports DIP R/A Type 16P

6-18 USB A Type Male Solder Type 4P

6-18 USB A Type Male Solder Type 4P

6-19 USB A Type Male SMT R/A Type 4P

6-19 USB A Type Male DIP R/A Type 4P

6-20 USB B Type Female DIP R/A Type 4P

6-20 USB B Type Female DIP Vertical Type 4P

6-21 USB B Type Female SMT R/A Type 4P

6-21 USB B Type Female SMT Vertical Type 4P

USB 4.0 Type C Female SMT R/A Sink Type 24P

Specifications

Current Rating: VBUS and GND Pin 3.0A
VCONN and GND Pin 1.25A
Other Pin 0.25A
Contact Resistance: 40mΩ Max
Insulation Resistance: 100mΩ Min.
Dielectric Withstanding Voltage: 100 V AC / Minute
Operation Temperature: -30°c To +80°c

Material

Housing: LCP UL94V-0
Contact : Beryllium Copper
Shell: Stainless Steel, Nickel Plated
Mid Plate: Stainless Steel
Ground: Stainless Steel

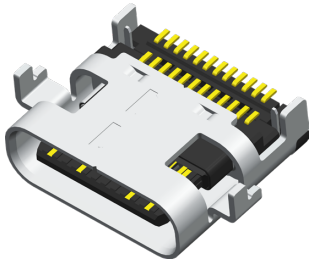

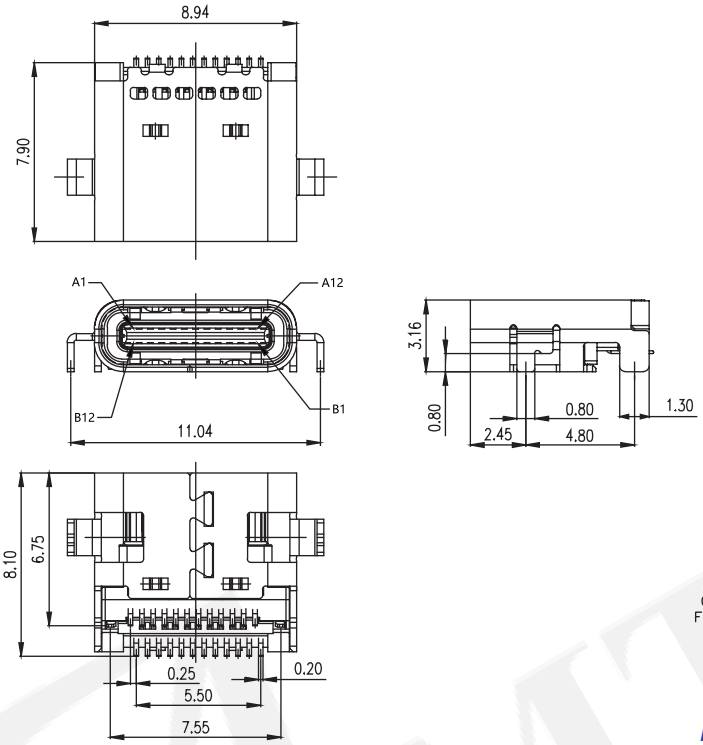

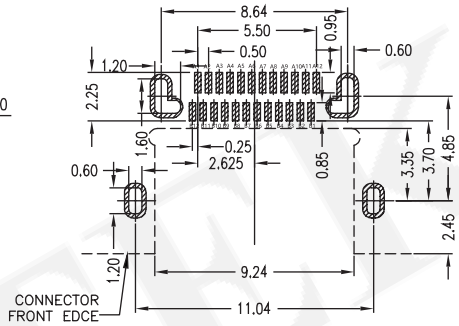

Recommended PCB Layout
(PCB TOLERANCE ±0.05)

P/N.:5US5C06MF-124G0BUHK1

USB 3.1 Type C Female SMT R/A Type 24P

Specifications

Current Rating: VBUS Pin 5.0A
GND Pin 5.0A, Other Pin 0.25A
Contact Resistance: 40mΩ Max
Insulation Resistance: 100mΩ Min.
Dielectric Withstanding Voltage: 100 V AC / Minute
Operation Temperature: -40°c To +85°c

Material

Housing: LCP UL94V-0
Contact : Corson Alloy
Shell: Stainless Steel, Ni Plated
Mid Plate: Stainless Steel

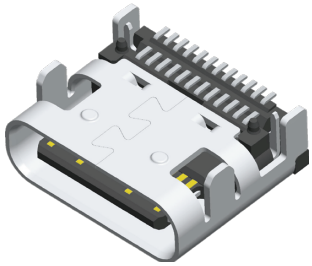

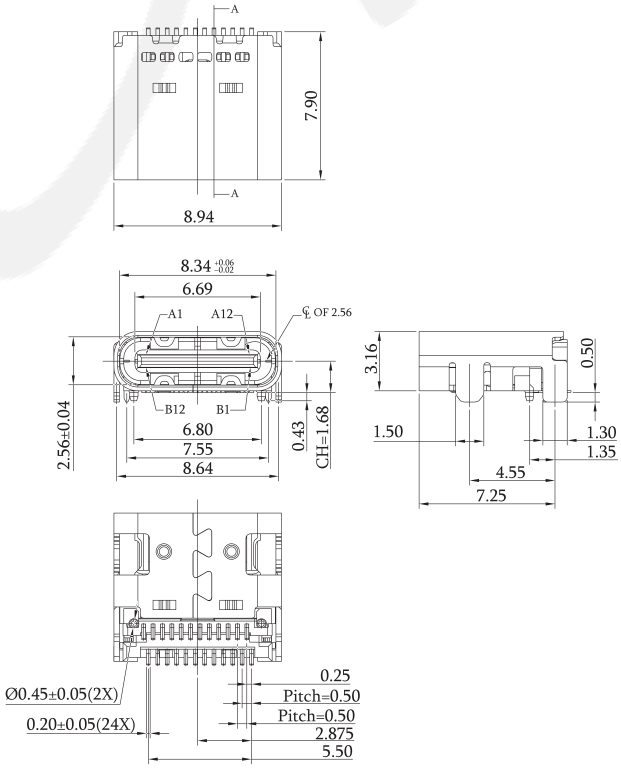

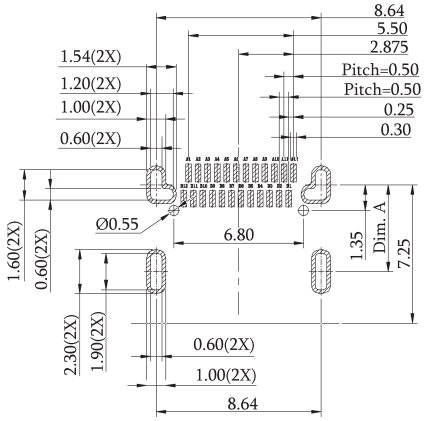

Recommended PCB Layout
(PCB TOLERANCE ±0.05)

P/N.:5US4C04MF-124G0BUH41

USB 3.1 Type C Female SMT R/A Type 16P

Specifications

Current Rating: VBUS Pin 5.0A
GND Pin 5.0A, Other Pin 0.25A
Contact Resistance: 40mΩ Max
Insulation Resistance: 100mΩ Min.
Dielectric Withstanding Voltage: 100 V AC / Minute
Operation Temperature: -40°c To +85°c

Material

Housing: LCP UL94V-0
Contact: Copper Nickel Silicon Alloy
Shell: Stainless Steel
Mid Plate: Stainless Steel

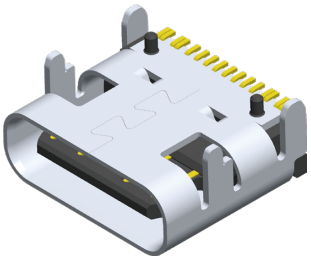

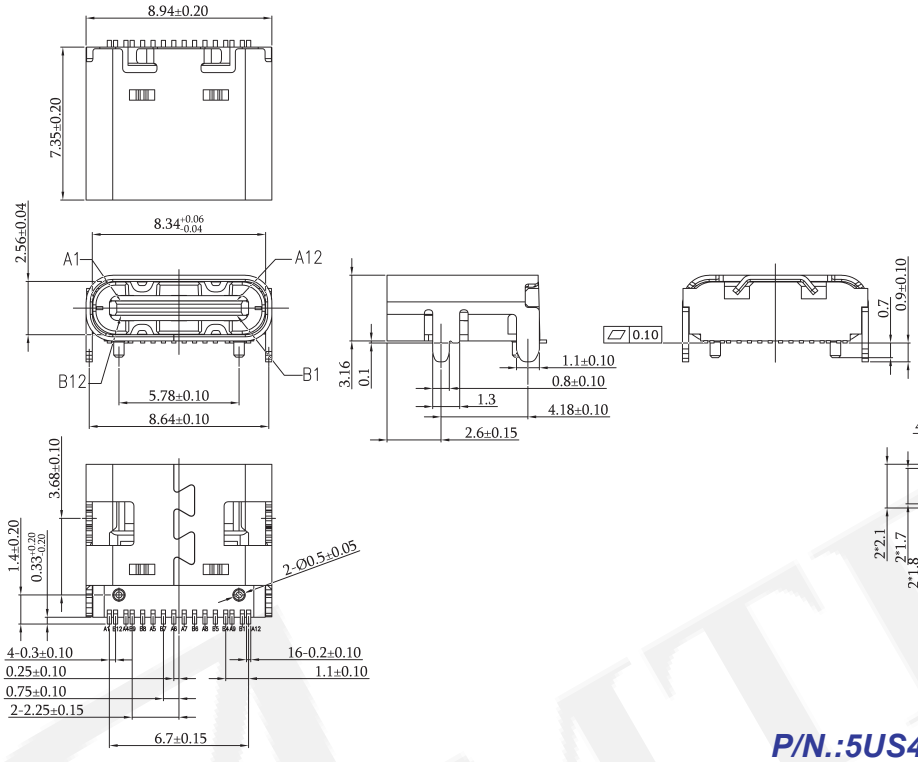

Recommended PCB Layout
(PCB TOLERANCE ±0.05)

P/N.:5US4C07MF-116G0BUH41

USB 3.1 Type C Female SMT R/A Type 16P

Specifications

Current Rating: VBUS Pin 5.0A
GND Pin 1.25A
Contact Resistance: 40mΩ Max
Insulation Resistance: 100mΩ Min.
Dielectric Withstanding Voltage: 100 V AC / Minute
Operation Temperature: -40°c To +85°c

Material

Housing: LCP UL94V-0
Contact: Copper Alloy
Shell: Stainless Steel
Mid Plate: Stainless Steel

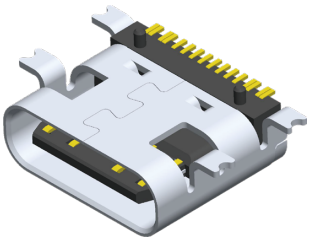

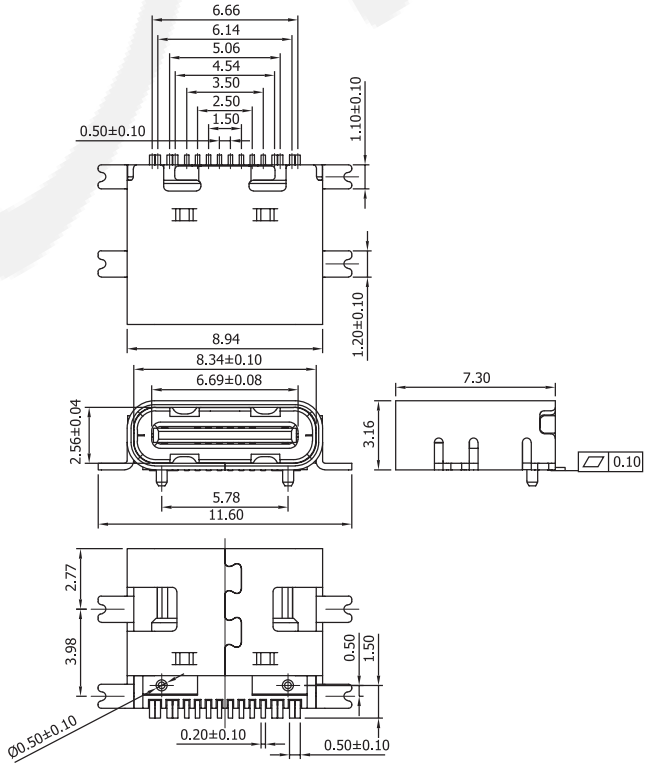

Recommended PCB Layout
(PCB TOLERANCE ±0.05)

P/N.:5US4C14MF-116G0BUH41

USB 3.1 Type C Female SMT R/A Type 16P

Specifications

Current Rating: VBUS Pin 5.0A
GND Pin 1.25A, Other Pin 0.25A
Contact Resistance: 40mΩ Max
Insulation Resistance: 100mΩ Min.
Dielectric Withstanding Voltage: 100 V AC / Minute
Operation Temperature: -40°c To +85°c

Material

Housing: LCP UL94V-0
Contact: Copper Alloy
Shell: Stainless Steel
Mid Plate: Stainless Steel

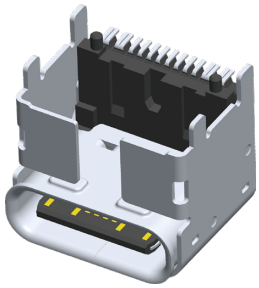

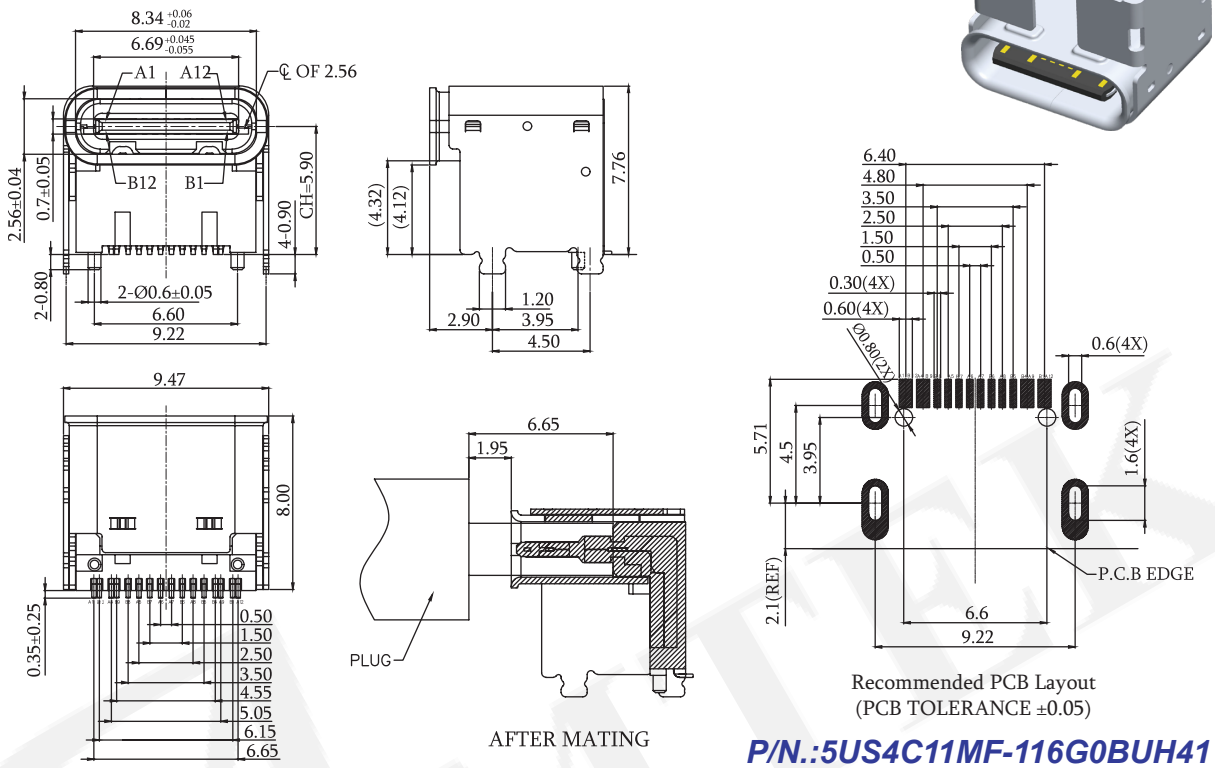

Recommended PCB Layout
(PCB TOLERANCE ±0.05)

P/N.:5US4C11MF-116G0BUH41

USB 3.1 Type C Female SMT R/A Waterproof Type 16P

Specifications

Current Rating: VBUS Pin 5.0A
GND Pin 5.0A, Other Pin 0.25A
Contact Resistance: 40mΩ Max
Insulation Resistance: 100mΩ Min.
Dielectric Withstanding Voltage: 100 V AC / Minute
Operation Temperature: -25°c To +85°c

Material

Housing: LCP UL94V-0
Contact : Copper Nickel Silicon Alloy
Shell: Stainless Steel, Nickel Plated
Mid Plate: Stainless Steel
Waterproof: IPX5

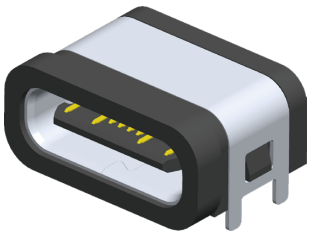

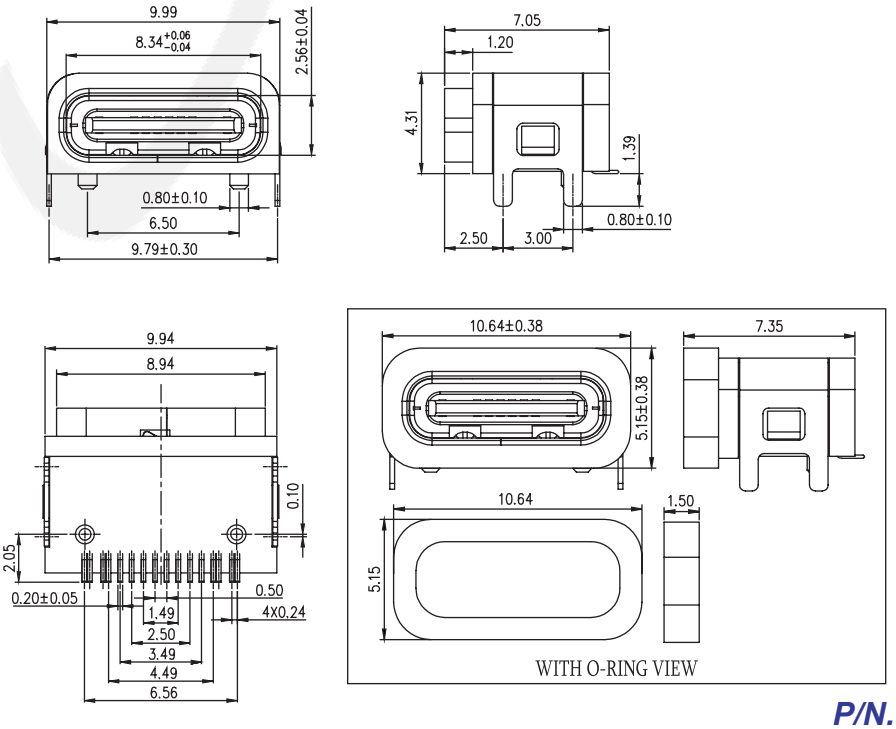

Recommended PCB Layout
(PCB TOLERANCE ±0.05)

P/N.:5US4C15MF-116G0BUH41

USB 3.1 Type C Female SMT R/A Sink Type 16P

Specifications
Current Rating: 3.0A
Voltage Rating: 5.0V
Contact Resistance: 40mΩ Max
Insulation Resistance: 100mΩ Min.
Dielectric Withstanding Voltage: 100 V AC / Minute

Material
Housing: LCP UL94V-0
Contact : Copper Chromium Alloy
Shell: Stainless Steel, Nickel Plated
Mid Plate: Stainless Steel

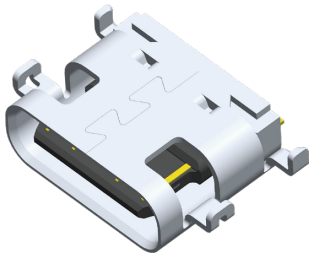

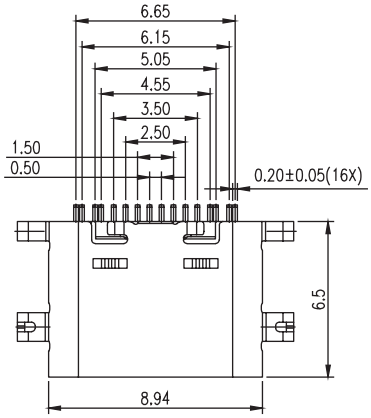

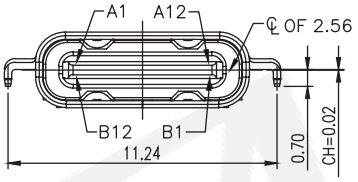

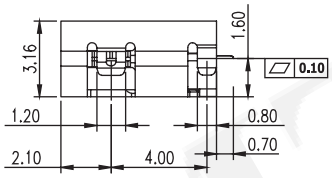

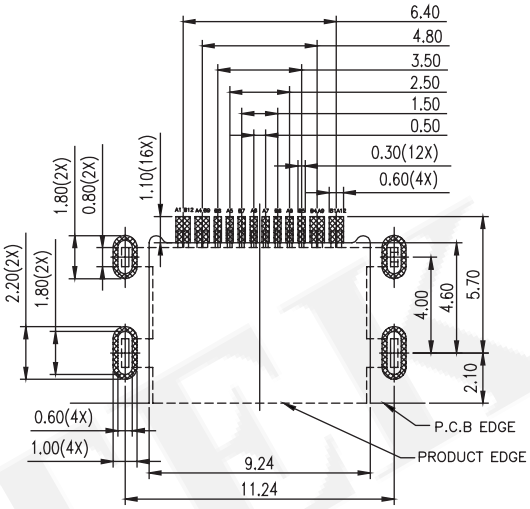

Recommended PCB Layout
(PCB TOLERANCE ±0.05)

P/N.:5US4C19MF-116G0BUHK1

USB 3.1 Type C Female SMT R/A Sink Type 16P

Specifications
Current Rating: 5.0A
Contact Resistance: ≤40mΩ Max
Insulation Resistance: ≥100mΩ Min.
Dielectric Withstanding Voltage: 100 V AC / Minute
Operation Temperature: -40°c To +75°c

Material
Housing: PA10T UL94V-0
Contact : Stainless Steel
Shell: Stainless Steel
Mid Plate: Stainless Steel

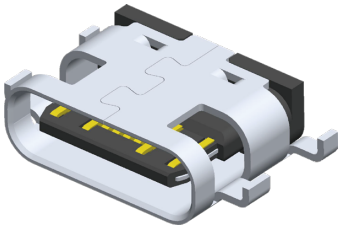

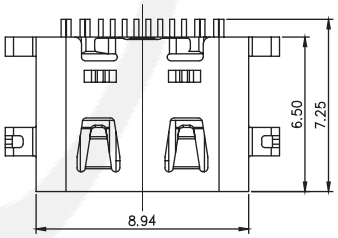

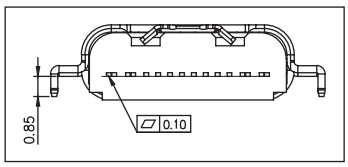

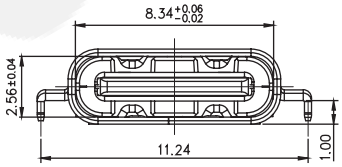

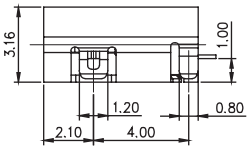

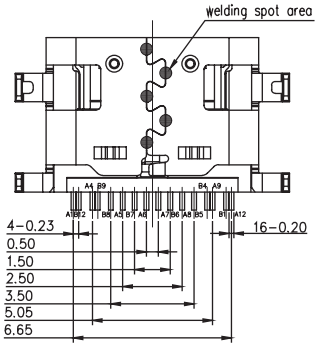

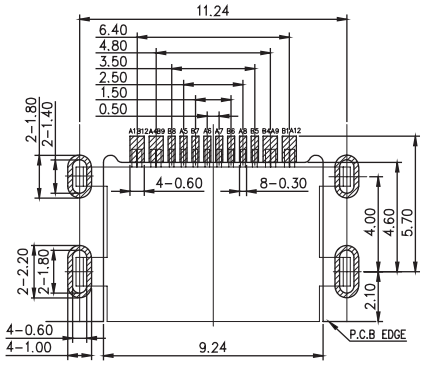

Recommended PCB Layout
(PCB TOLERANCE ±0.05)

P/N.:5US4C29MF-116G0BUH41

USB 3.1 Type C Female SMT R/A Sink Type 24P

Specifications

Current Rating: VBUS Pin 5.0A
GND Pin 1.25A, Other Pin 0.25A
Rated Voltage: 20 V DC Max
Dielectric Strength: 100 V AC
Contact Resistance: 40mΩ Max
Insulation Resistance: 100mΩ Min.
Operation Temperature: -30°c To +80°c

Material

Housing: LCP UL94V-0
Contact : Copper Alloy
Shell: Stainless Steel, T=0.30, Nickel Plated
Shild: Stainless Steel, T=0.12, Nickel Plated

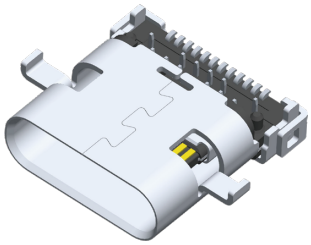

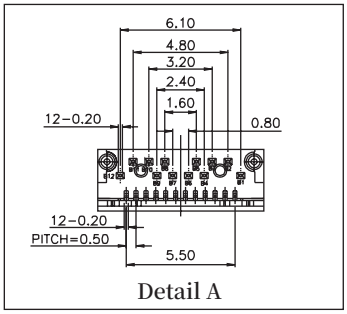

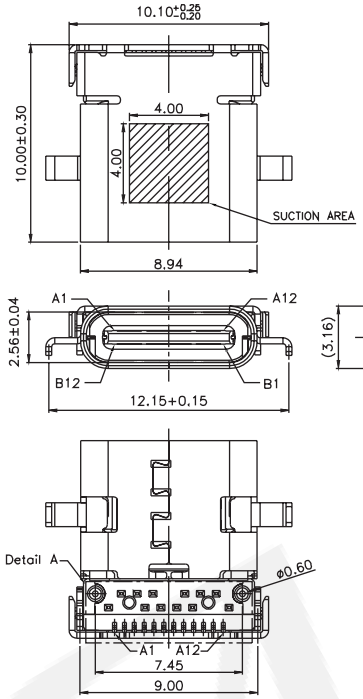

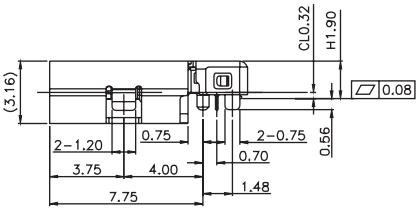

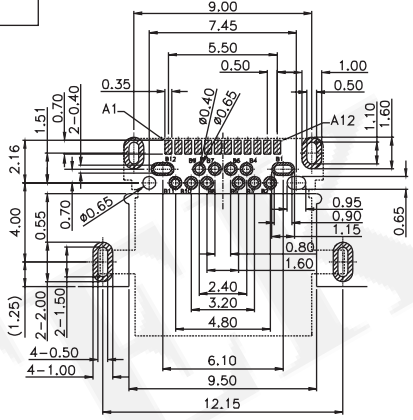

Recommended PCB Layout
(PCB TOLERANCE ±0.05)

P/N.:5US4C22MF-124G0BUHK1

USB 3.1 Type C Female SMT R/A Sink Waterproof Type 24P

Specifications

Current Rating: VBUS Pin 5.0A
GND Pin 5.0A, Other Pin 0.25A
Contact Resistance: 40mΩ Max
Insulation Resistance: 100mΩ Min.
Dielectric Withstanding Voltage: 100 V AC / Minute
Operation Temperature: -40°c To +80°c

Material

Housing: High Temp
Contact : Copper Nickel Silicon Alloy
Shell: Stainless Steel, Nickel Plated
Mid Plate: Stainless Steel
Waterproof: IPX7

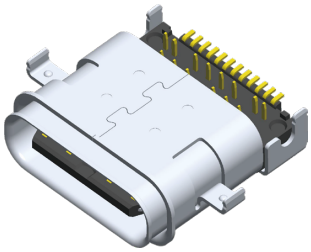

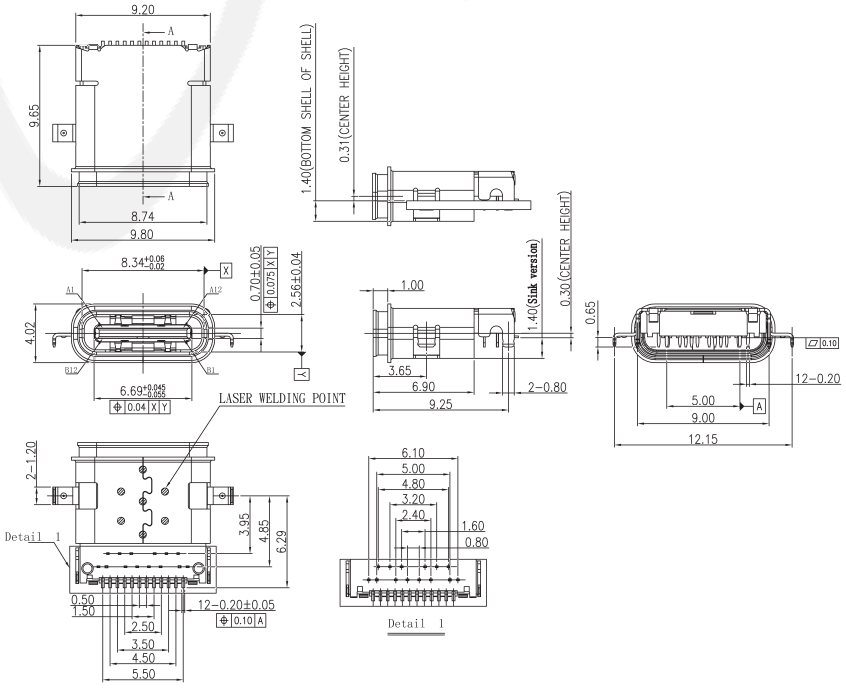

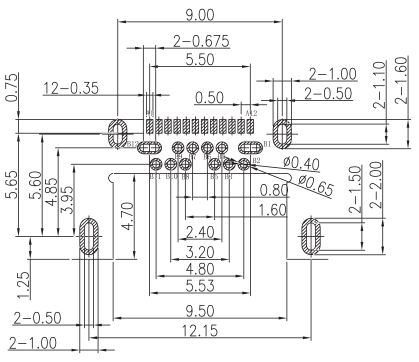

Recommended PCB Layout
(PCB TOLERANCE ±0.05)

P/N.:5US4C10MF-124G3BUH41

USB 3.1 Type C Female SMT R/A Sink Waterproof Type 24P

Specifications

Current Rating: VBUS Pin 1.25A
GND Pin 1.25A
Contact Resistance: 40mΩ Max
Insulation Resistance: 100mΩ Min.
Dielectric Withstanding Voltage: 100 V AC / Minute
Operation Temperature: -40°c To +80°c

Material

Housing: High Temp
Contact : Copper Nickel Silicon Alloy
Shell: Stainless Steel, Nickel Plated
Mid Plate: Stainless Steel
Waterproof: IPX7

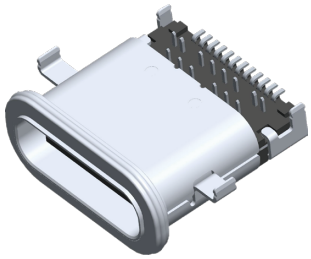

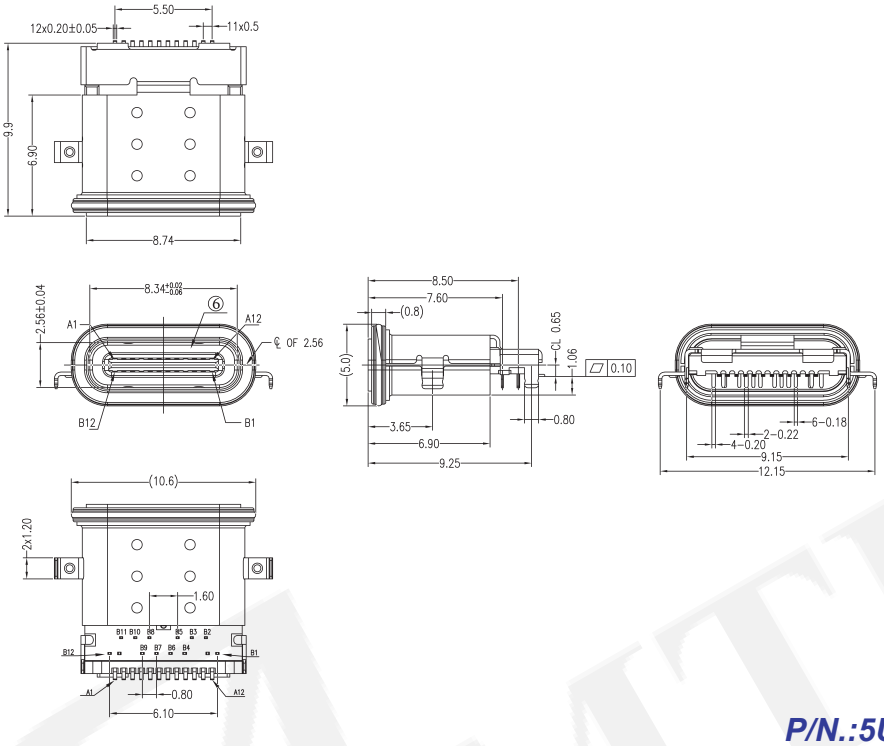

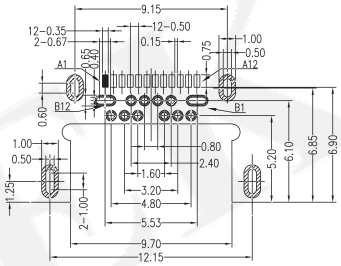

Recommended PCB Layout
(PCB TOLERANCE ±0.05)

P/N.:5US4C20MF-124S0BUH41

USB 3.1 Type C Female SMT Vertical Type 24P H=10.5mm

Specifications

Current Rating: VBUS Pin 5.0A
GND Pin 5.0A, Other Pin 0.25A
Contact Resistance: 40mΩ Max
Insulation Resistance: 100mΩ Min.
Dielectric Withstanding Voltage: 100 V AC / Minute
Operation Temperature: -40°c To +85°c

Material

Housing: LCP UL94V-0
Contact : Corson Alloy
Shell: Stainless Steel
Mid Plate: Stainless Steel

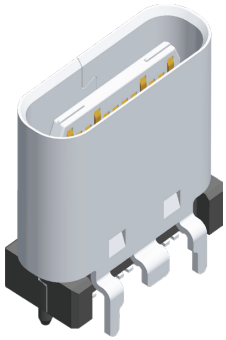

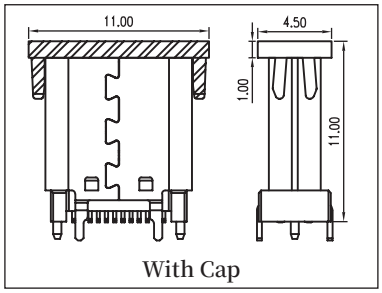

With Cap

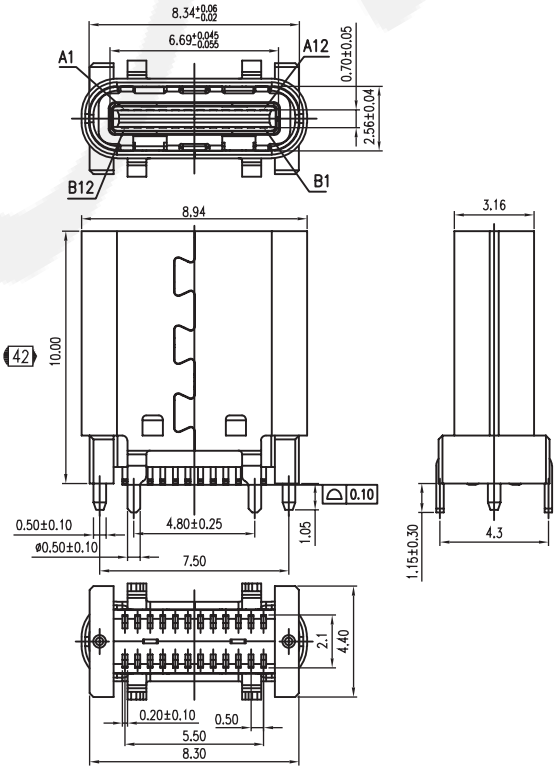

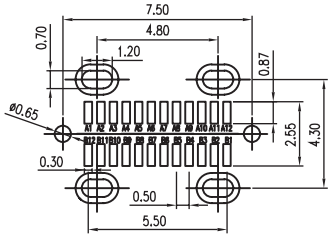

Recommended PCB Layout
(PCB TOLERANCE ±0.05)

P/N.:5US4C01GF-124S0BUR42

USB 3.1 Type C Female DIP Upright Type 14P

Specifications
Current Rating: 5.0A
Voltage Rating: 5.0V
Contact Resistance: 40mΩ Max
Insulation Resistance: 100mΩ Min.
Dielectric Withstanding Voltage: 100 V AC / Minute
Operation Temperature: -45°c To +85°c

Material
Housing: PA9T, UL94V-0
Contact : Copper Alloy
Shell: Stainless Steel

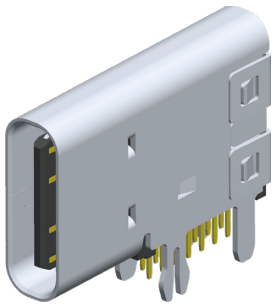

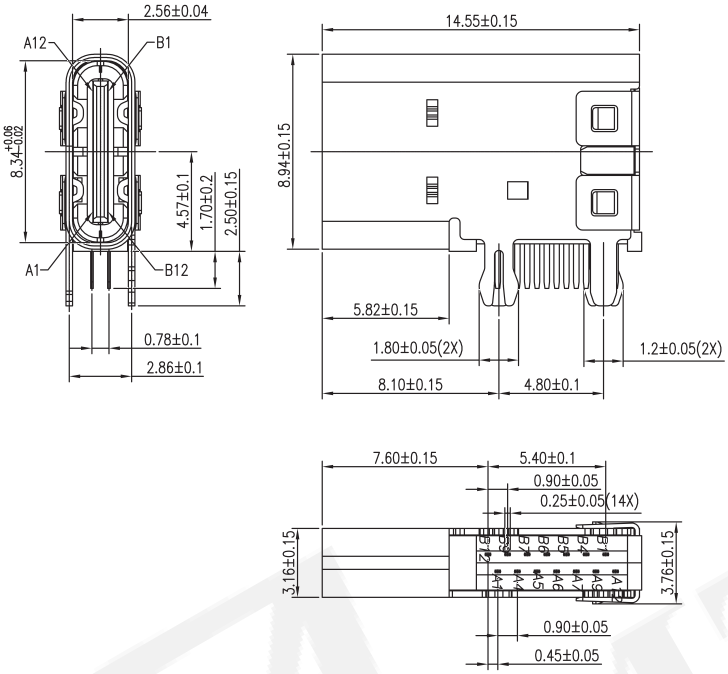

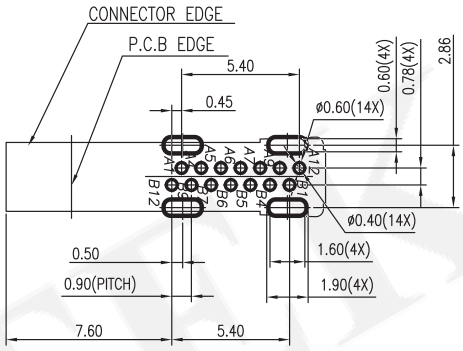

Recommended PCB Layout
(PCB TOLERANCE ±0.05)

P/N.:5US4C01UF-114G0BUA41

USB 3.1 Type C Female DIP Upright Type 14P

Specifications
Current Rating: VBUS Pin 5.0A
GND Pin 5.0A, Other Pin 0.25A
Contact Resistance: 40mΩ Max
Insulation Resistance: 100mΩ Min.
Dielectric Withstanding Voltage: 100 V AC / Minute
Operation Temperature: -40°c To +85°c

Material
Housing: PA9T, UL94V-0
Contact : Chromium Copper
Shell: Stainless Steel

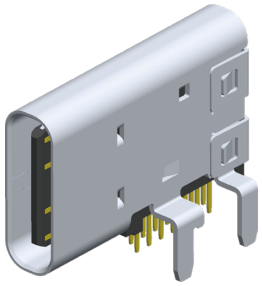

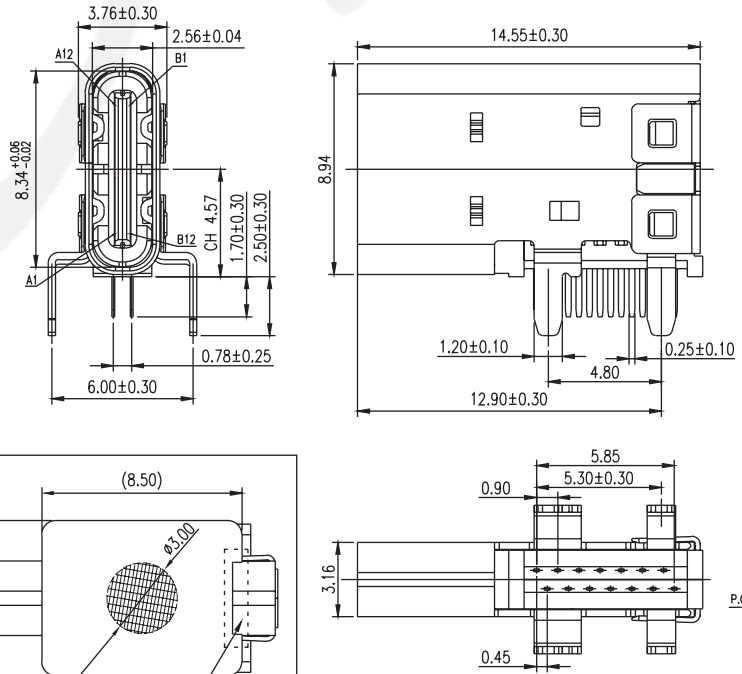

Recommended PCB Layout
(PCB TOLERANCE ±0.05)

P/N.:5US4C02UF-114G0BUR41

USB 3.1 Type C Female Straddle Type 24P

Specifications

Current Rating: 5 AMP for VBUS Pin,
1.25 AMP for VCONN Pin
Contact Resistance: 40mΩ Max
Insulation Resistance: 100mΩ Min.
Dielectric Withstanding Voltage: 100 V AC / Minute
Operation Temperature: -25°c To +85°c

Material

Housing: Hi-Temp. Thermoplastic, UL94V-0
Contact : Copper Alloy
Shell: Matte Tin Plated / Nickel Plated



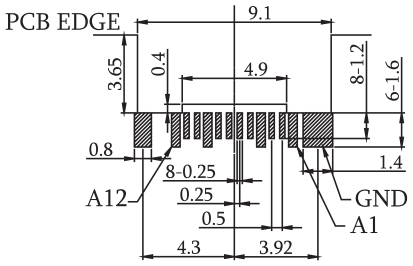

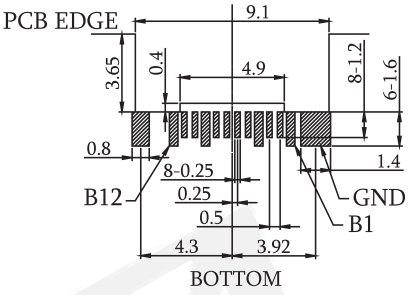

Recommended PCB Layout
(PCB TOLERANCE ±0.05)

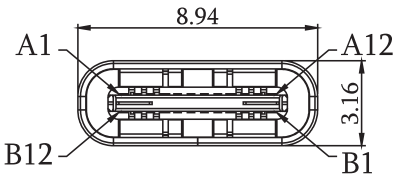

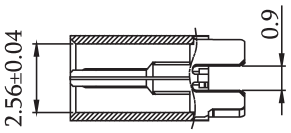

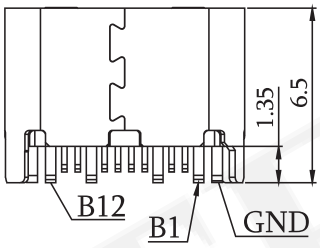

P/N.:5US4C01TF-124XXBUHC1

S0: Selective SF:Selective 15u" SD:Selective 30u"

USB 3.1 Type C Female Straddle Type 24P

Specifications

Current Rating: 5 AMP for VBUS Pin,
1.25 AMP for VCONN Pin
Contact Resistance: 40mΩ Max
Insulation Resistance: 100mΩ Min.
Dielectric Withstanding Voltage: 100 V AC / Minute
Operation Temperature: -25°c To +85°c

Material

Housing: Hi-Temp. Thermoplastic, UL94V-0
Contact : Copper Alloy
Shell: Stainless Steel, Matte Tin Plated

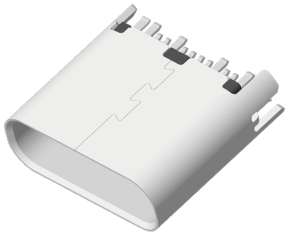

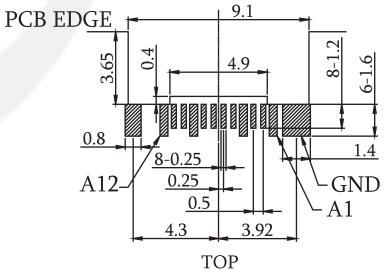

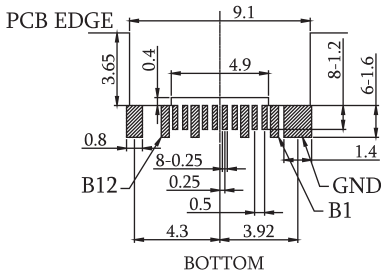

Recommended PCB Layout
(PCB TOLERANCE ±0.05)

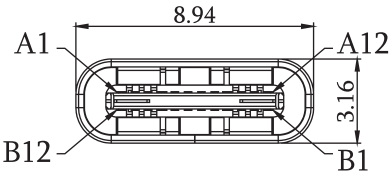

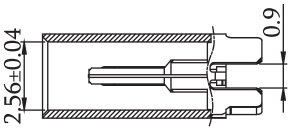

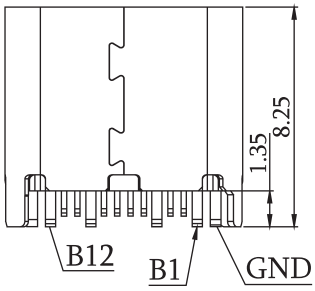

P/N.:5US4C01TF-124XXBUHC2

S0: Selective SF:Selective 15u" SD:Selective 30u"

USB 3.1 Type C Male Straddle Type 24P

Specifications

Current Rating: VBUS Pin 5.0A
GND Pin 1.25A, Other Pin 0.25A
Contact Resistance: 40mΩ Max
Insulation Resistance: 100mΩ Min.
Dielectric Withstanding Voltage: 100 V AC / Minute
Operation Temperature: -55°c To +85°c

Material

Housing: LCP, UL94V-0
Contact : Brass
Shell: Stainless Steel, Nickel Plated

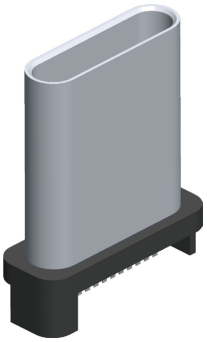

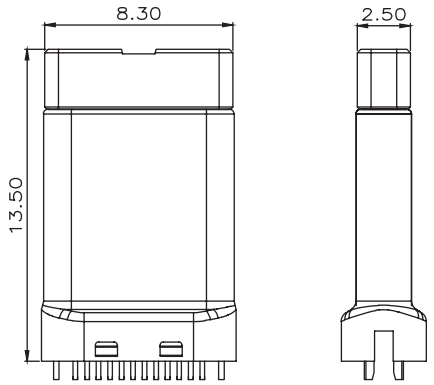

WITH CAP

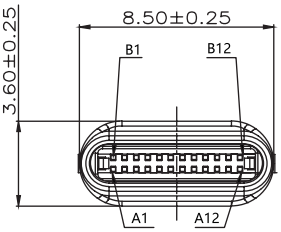

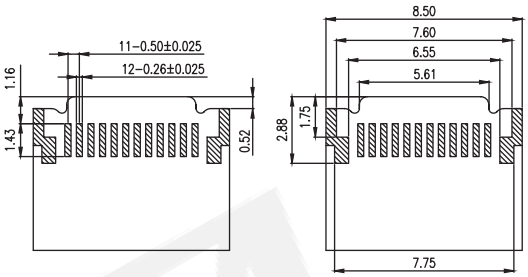

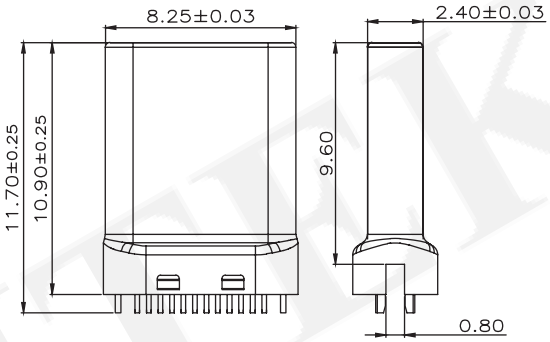

Recommended PCB Layout
(PCB TOLERANCE ±0.05)

P/N.:5US4C12TM-124S0BUCK1

USB 3.1 Type C Male SMT Vertical Type 24P H=11.1mm

Specifications

Current Rating: 3.0A
Voltage Rating: 5.0V
Contact Resistance: 50mΩ Max
Insulation Resistance: 100mΩ Min.
Dielectric Withstanding Voltage: 100 V AC / Minute
Operation Temperature: -25°c To +85°c

Material

Housing: LCP UL94V-0
Contact : Copper Alloy
Shell: Stainless Steel

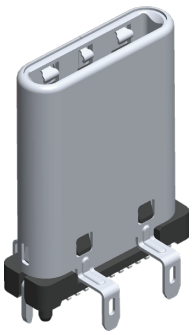

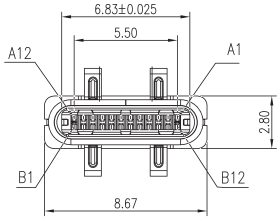

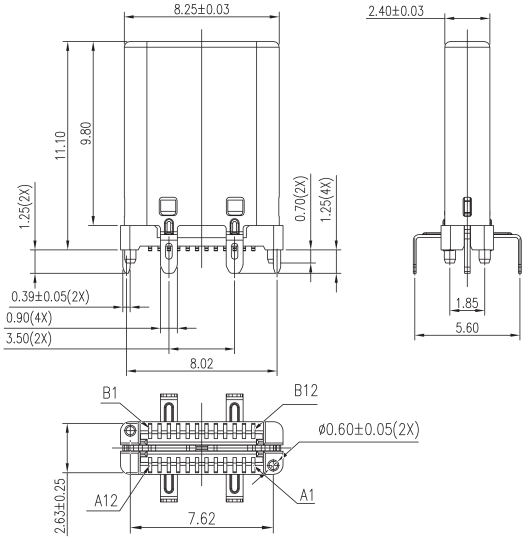

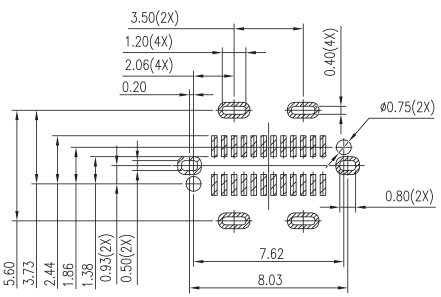

Recommended PCB Layout
(PCB TOLERANCE ±0.05)

P/N.:5US4C02GM-124S0BUR41

USB 3.1 Type C Male SMT Vertical Type 24P H=11.1mm

Specifications
Current Rating: 3.0A
Voltage Rating: 5.0V
Contact Resistance: 40mΩ Max
Insulation Resistance: 100mΩ Min.
Dielectric Withstanding Voltage: 100 V AC / Minute
Operation Temperature: -25°c To +85°c

Material
Housing: LCP UL94V-0
Contact : Copper Alloy
Shell: Stainless Steel

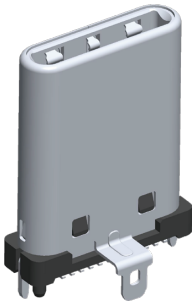

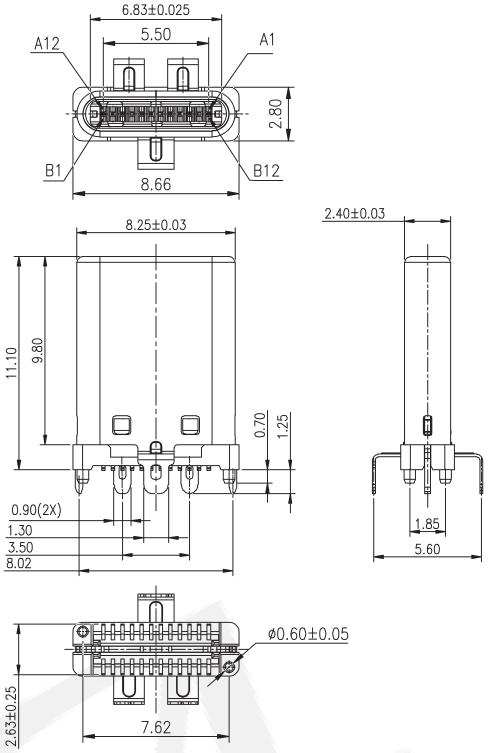

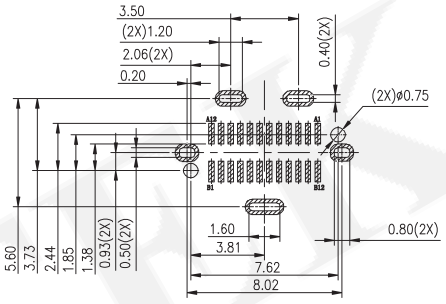

Recommended PCB Layout
(PCB TOLERANCE ±0.05)

P/N.:5US4C01GM-124S0BUH41

USB 3.1 Type C Male Straddle Type 24P

Specifications
Current Rating: 5.0A for VBUS, 0.25A for other
Voltage Rating: 5.0V
Contact Resistance: 40mΩ Max
Insulation Resistance: 100mΩ Min.
Dielectric Withstanding Voltage: 100 V AC / Minute

Material
Housing: LCP UL94V-0
Shell: Stainless Steel, Nickel Plated
Contact:Copper Nickel Silicon Alloy



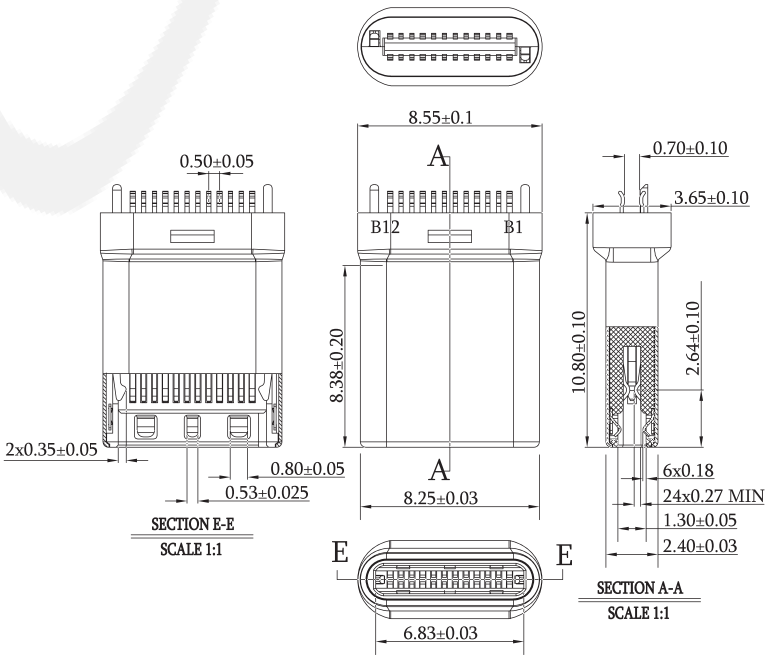

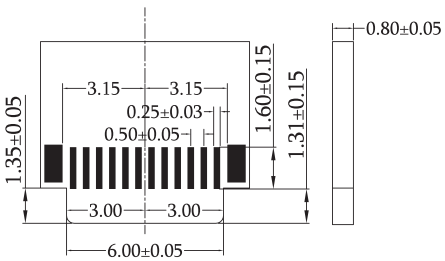

Recommended PCB Layout
(PCB TOLERANCE ±0.05)

P/N.:5US4C09TM-124S0BUX41
T:Tube W/O Cap C:Tube With Cap

RoHS

Mini USB B Type Female SMT R/A Type 5P

Specifications
Current Rating: 1.0A
Contact Resistance: 30mΩ Max
Insulation Resistance: 500mΩ Min.
Dielectric Withstanding Voltage: 30 V AC / Minute
Operation Temperature: -55°c To +105°c

Material
Housing: LCP UL94V-0
Contact : Copper Alloy
Shell: Copper Alloy

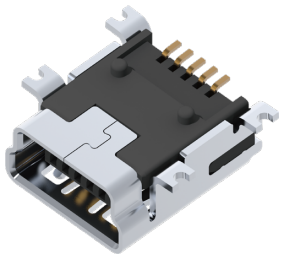

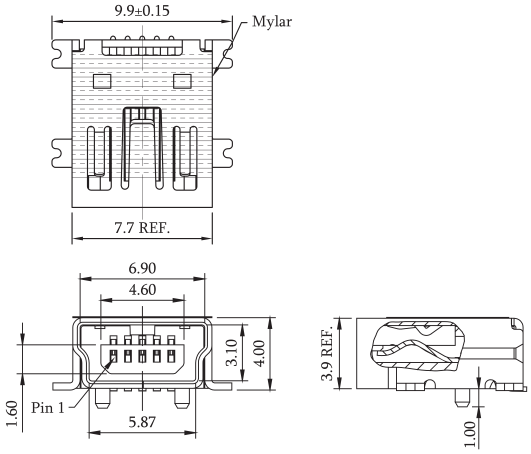

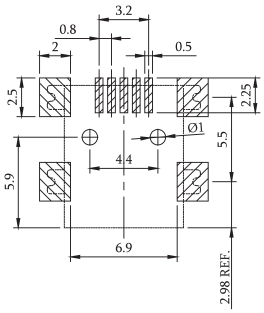

Recommended PCB Layout
(PCB TOLERANCE ±0.05)

P/N.:5UM2B02MF-105S0BUXC1
H:T/R W/O Mylar M:T/R With Mylar
Old P/N:MUSB-BS-5-U

Mini USB B Type Female Dip R/A Type 5P

Specifications
Current Rating: 1.0A
Contact Resistance: 50mΩ Max
Insulation Resistance: 100mΩ Min.
Dielectric Withstanding Voltage: 300 V AC / Minute
Operation Temperature: -25°c To +85°c

Material
Housing: LCP UL94V-0
Contact : Copper Alloy
Shell: Copper Alloy, Nickel Plated

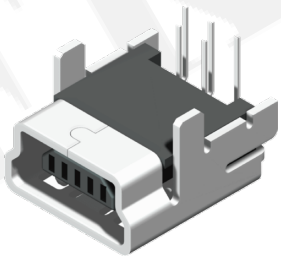

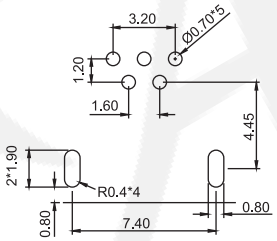

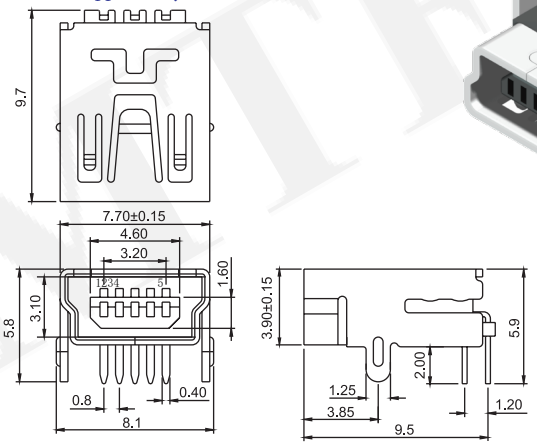

Recommended PCB Layout
(PCB TOLERANCE ±0.05)

P/N.:5UM2B05RF-105GDBUA71
Old P/N:MUSB-BD-5-U

Micro USB AB Type Female SMT R/A Type 5P

Specifications
Current Rating: 1.5A
Contact Resistance: 30mΩ Max
Insulation Resistance: 100mΩ Min.
Dielectric Withstanding Voltage: 100 VAC / Minute
Operation Temperature: -40°c To +85°c

Material
Housing: LCP UL94V-0
Contact : Copper Alloy
Shell: Copper Alloy, Matte Tin Plated

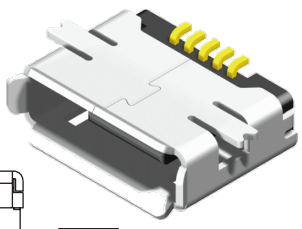

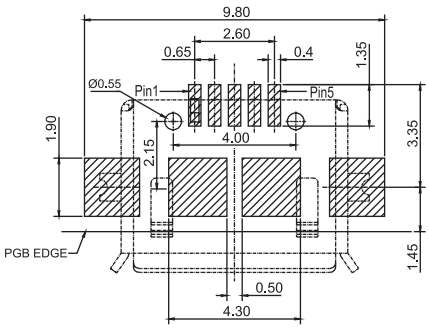

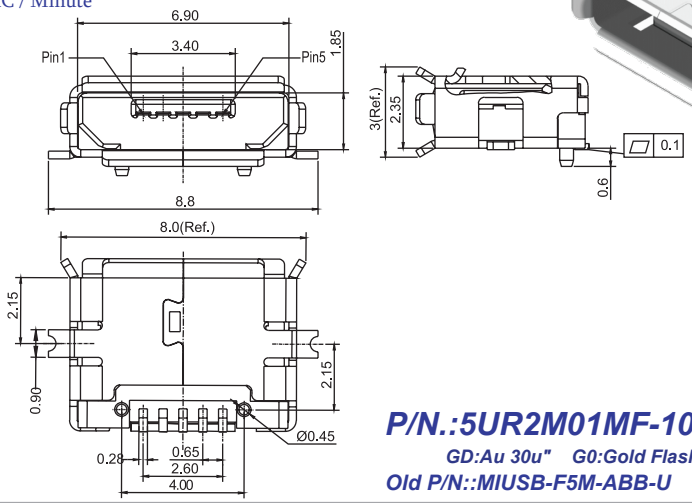

Recommended PCB Layout
(PCB TOLERANCE ±0.05)

P/N.:5UR2M01MF-105XXBUH71
GD:Au 30u" G0:Gold Flash
Old P/N::MIUSB-F5M-ABB-U

USB 2.0+3.2 A Type Female 2 Ports DIP R/A Type 9P

Specifications
Current Rating: 1.8A for VBUS & GND(Pin 1 & Pin 4)
0.25A for Other Pin
Contact Resistance: 30mΩ Max
Insulation Resistance: 100mΩ Min.
Dielectric Withstanding Voltage: 100 V AC / Minute
Operation Temperature: -55°c To +85°c

Material
Housing: Nylon 9T, UL94V-0
Contact : Copper Alloy
Shell: Stainless Steel

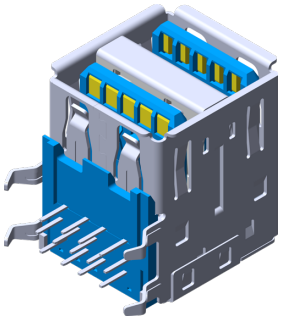

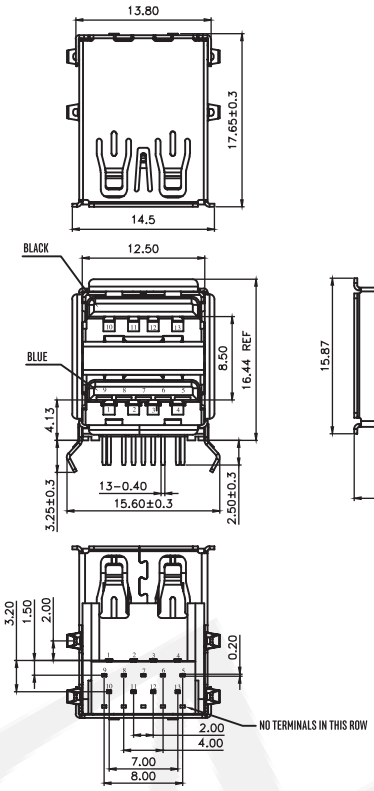

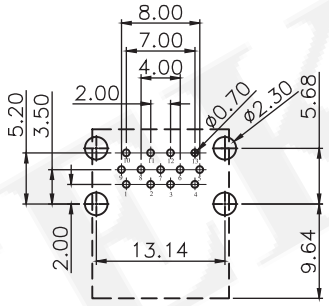

Recommended PCB Layout
(PCB TOLERANCE ±0.05)

P/N.:5US3A27RF-2ABS0ZUAH1

USB 3.1 A Type Female 2 Ports DIP R/A Type 9P

Specifications
Current Rating: 1.8A for VBUS & GND(Pin 1 & Pin 4)
0.25A for Other Pin
Contact Resistance: 30mΩ Max
Insulation Resistance: 100mΩ Min.
Dielectric Withstanding Voltage: 100 V AC / Minute
Operation Temperature: -55°c To +85°c

Material
Housing: Nylon 9T, UL94V-0
Contact : Copper Alloy
Shell: Stainless Steel

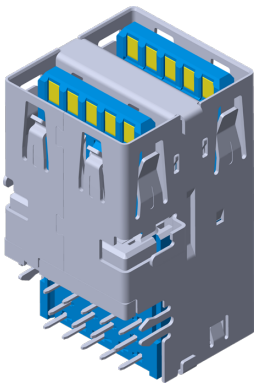

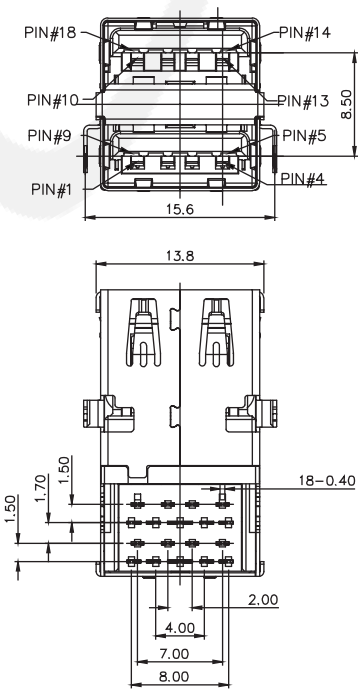

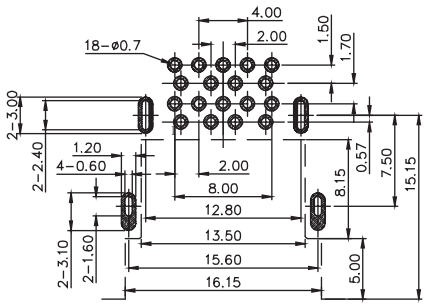

Recommended PCB Layout
(PCB TOLERANCE ±0.05)

P/N.:5US4A25RF-209MDUUHH1

USB 3.1 A Type Female 3Ports & 4Ports DIP R/A Type 9P

Specifications

Current Rating: 1.8A for VBUS & GND(Pin 1 & Pin 4)
0.25A for Other Pin
Contact Resistance: 50mΩ Max
Insulation Resistance: 100mΩ Min.
Dielectric Withstanding Voltage: 100 V AC / Minute
Operation Temperature: -55°c To +85°c

Material

Housing: Nylon 66, UL94V-0
Contact : Copper Alloy
Shell: Stainless Steel

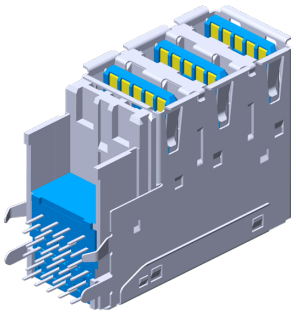

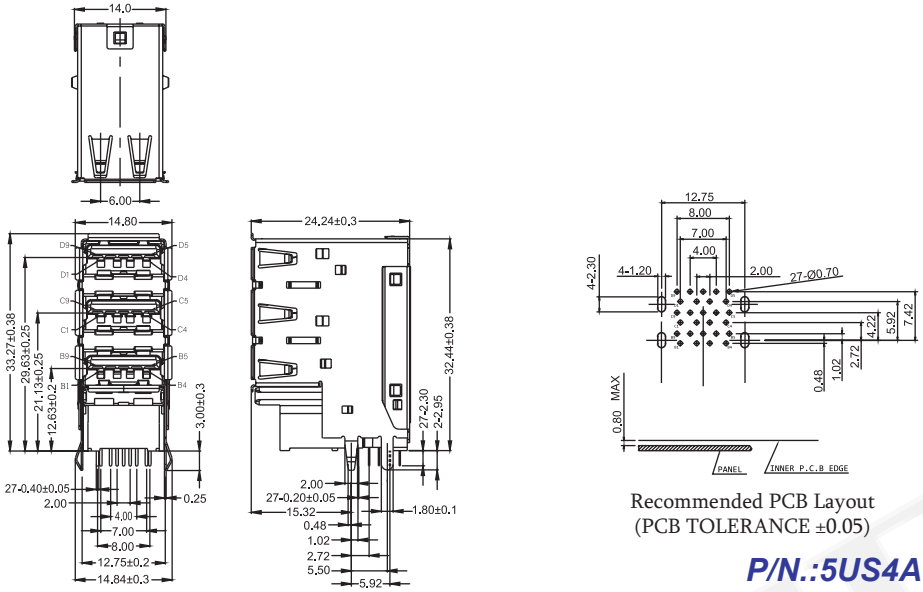

Recommended PCB Layout
(PCB TOLERANCE ±0.05)

P/N.:5US4A01RF-309SMULAH1

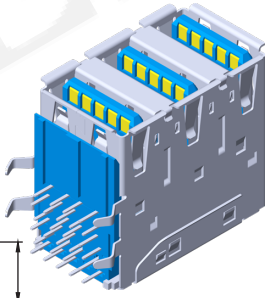

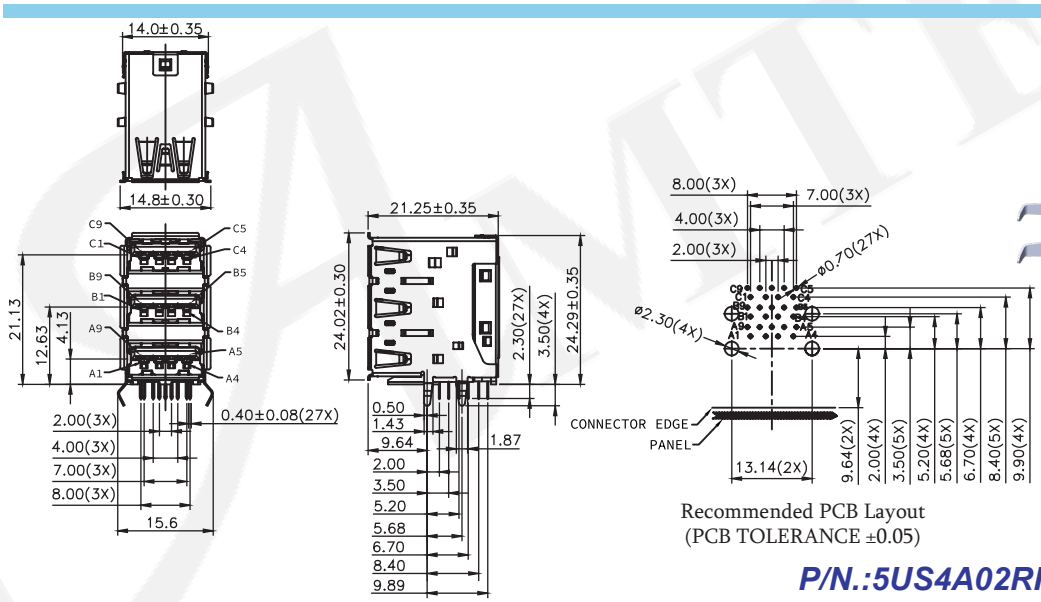

Recommended PCB Layout
(PCB TOLERANCE ±0.05)

P/N.:5US4A02RF-309SMUUAH1

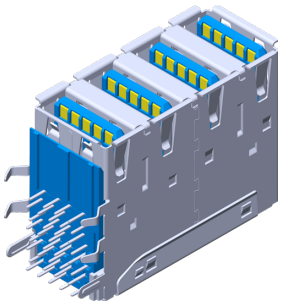

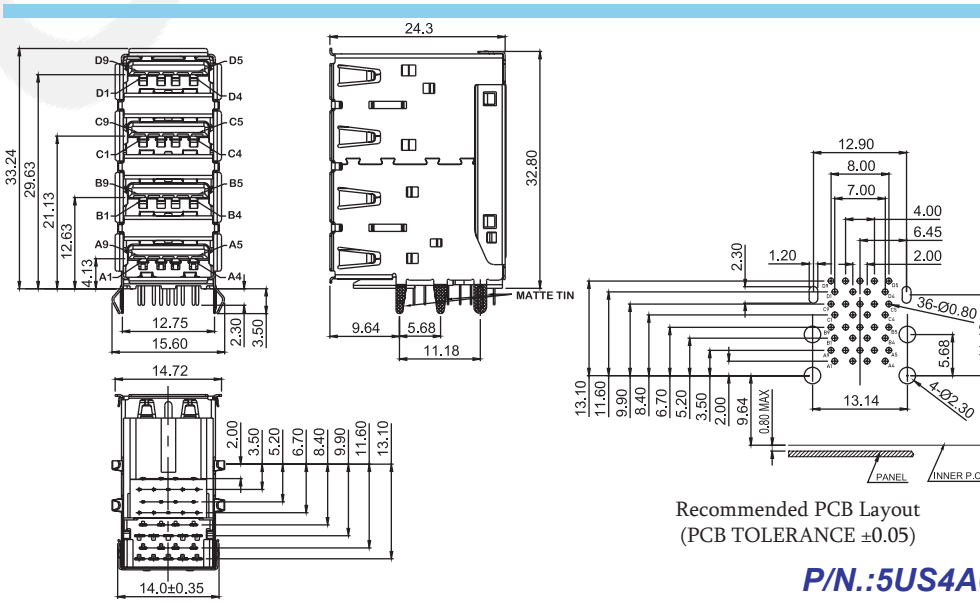

Recommended PCB Layout
(PCB TOLERANCE ±0.05)

P/N.:5US4A01RF-409SMULAH1

USB A Type Female Dip R/A Reverse Type 4P

Specifications
Current Rating: 2.5A
Voltage Rating: 250V AC
Contact Resistance: 20mΩ Max
Insulation Resistance: 1000mΩ Min.
Dielectric Withstanding Voltage: 500 V AC / Minute
Operation Temperature: -30°c To +85°c

Material
Housing: LCP UL94V-0
Contact : Phosphor Bronze
Shell: Stainless Steel

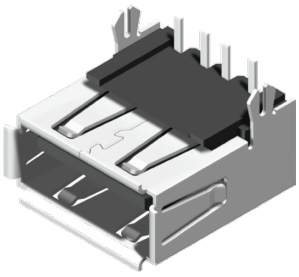

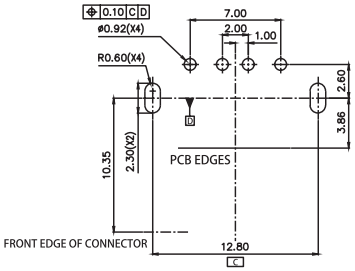

Recommended PCB Layout
(PCB TOLERANCE ±0.05)

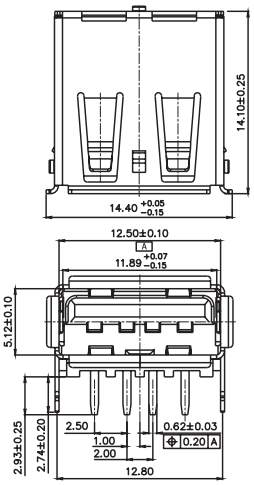

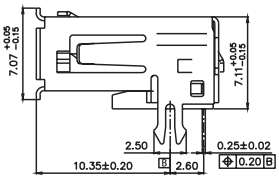

P/N.:5US2A30RF-104S0BUAK1
Old P/N:USB-001RD-AX-U

USB A Type Female SMT R/A Type 4P

Specifications
Current Rating: DC 30V 1.5 MAX
Contact Resistance: 30mΩ Max
Insulation Resistance: 1000mΩ Min.
Dielectric Withstanding Voltage: 500 V AC / Minute

Material
Housing: LCP
Contact : Brass
Shell: Steel

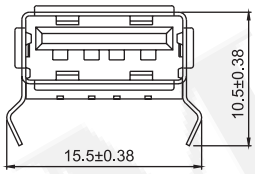

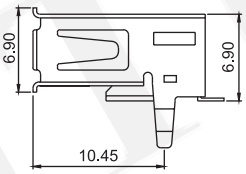

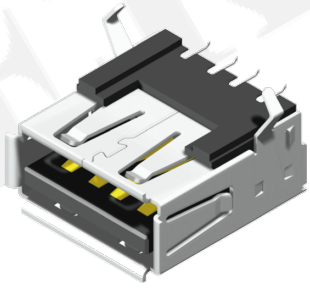

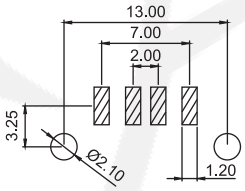

Recommended PCB Layout
(PCB TOLERANCE ±0.05)

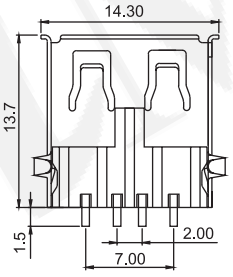

P/N.:5US2A07MF-104S0XUA71
B:Black W:Natural
Old P/N:USB-001H-AX-U

USB A Type Female SMT R/A Type 4P With Peg

Specifications
Current Rating: 1.5A
Voltage Rating: 30V AC
Contact Resistance: 30mΩ Max
Insulation Resistance: 1000mΩ Min.
Dielectric Withstanding Voltage: 500 V AC / Minute

Material
Housing: LCP
Contact : Brass
Shell: Brass, Nickel Plated

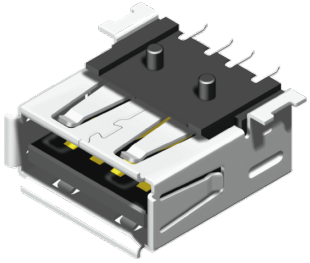

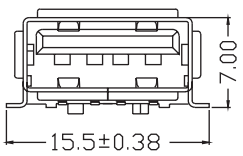

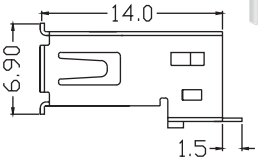

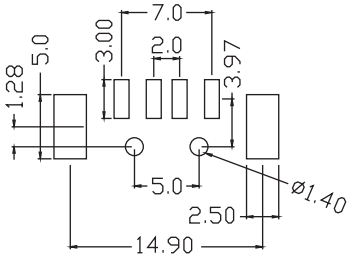

Recommended PCB Layout
(PCB TOLERANCE ±0.05)

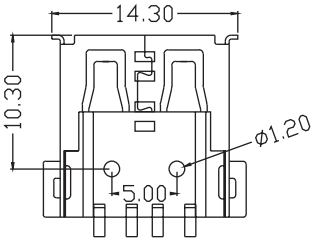

P/N.:5US2A08MF-104S0XUA71
B:Black W:Natural
Old P/N:USB-001H-AX-U

USB A Type Female Solder Type 4P

Specifications
Current Rating: 1A
Voltage Rating: 30V AC
Contact Resistance: 30mΩ Max
Insulation Resistance: 1000mΩ Min.
Dielectric Withstanding Voltage: 500 V AC / Minute
Operation Temperature: -55°c To +85°c

Material
Housing: P.B.T UL94V-0
Contact : Brass
Shell: Brass

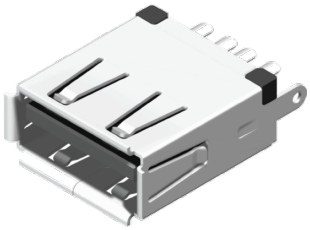

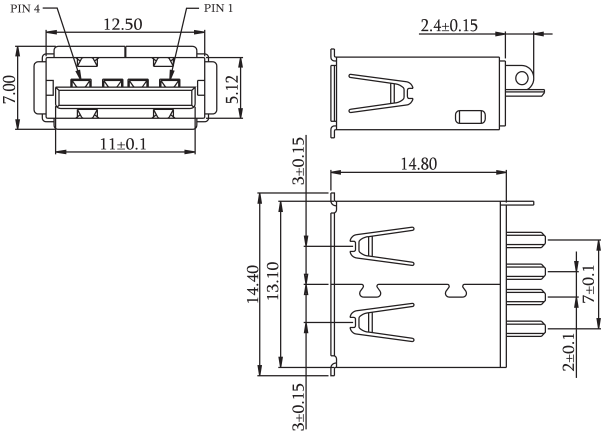

P/N.:5US2A15SF-104S0WLBC1
Old P/N:USB-FS-AW-L

USB A Type Female Dip Vertical Type 4P

Specifications
Current Rating: 1A
Voltage Rating: 30V AC
Contact Resistance: 30mΩ Max
Insulation Resistance: 1000mΩ Min.
Dielectric Withstanding Voltage: 500 V AC / Minute
Operation Temperature: -55°c To +85°c

Material
Housing: P.B.T UL94V-0
Contact : Brass

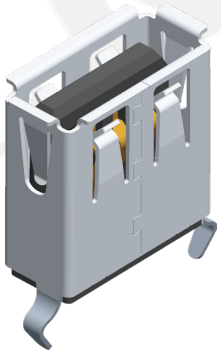

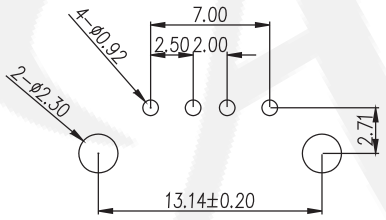

Recommended PCB Layout
(PCB TOLERANCE ±0.05)

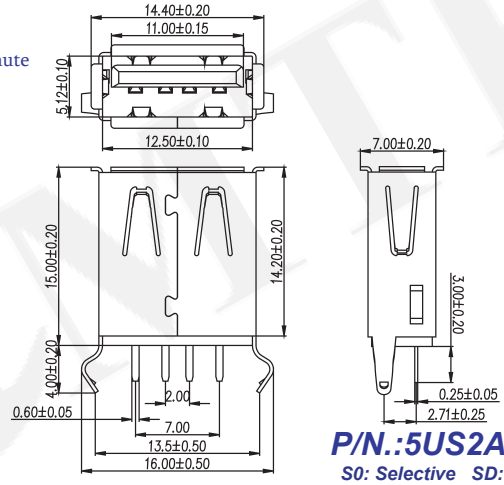

P/N.:5US2A04DF-104XXXLAC1
S0: Selective SD:Selective 30u"
B:Black W:Natural
Old P/N:USB-001K-AW-L

USB A Type Female Dip Upright Type 4P

Specifications
Current Rating: 1A
Voltage Rating: 250V AC
Contact Resistance: 30mΩ Max
Insulation Resistance: 1000mΩ Min.
Dielectric Withstanding Voltage: 500 V AC / Minute
Operation Temperature: -55°c To +85°c

Material
Housing: P.B.T UL94V-0
Contact : Copper Alloy
Shell: Steel Nickel Plated

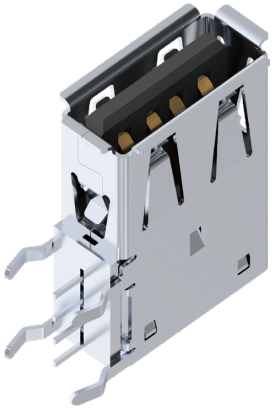

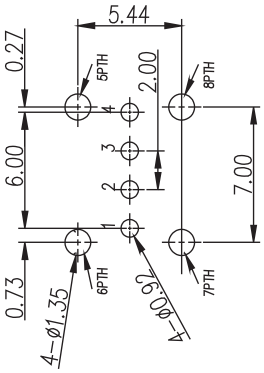

Recommended PCB Layout
(PCB TOLERANCE ±0.05)

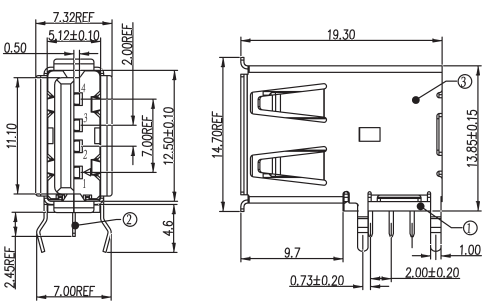

P/N.:5US2A05RF-104S0XLAC1
B:Black W:Natural
Old P/N:USB-001V-AX-L

USB A Type Female 2 Ports Dip R/A Type 8P

Specifications
Contact Resistance: 30mΩ Max
Insulation Resistance: 1000mΩ Min.
Dielectric Withstanding Voltage: 500 V AC / Minute
Operation Temperature: -25°c To +85°c

Material
Housing: Nylon 4T-30%GF, UL94V-0
Contact : Brass
Shell: Stainless Steel, Nickel Plated

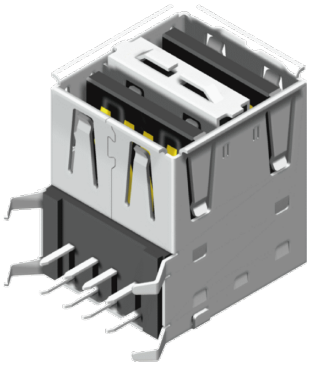

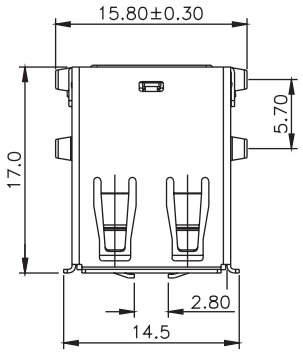

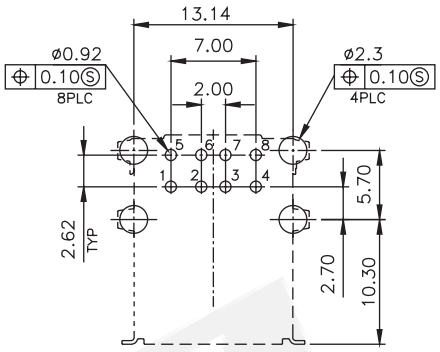

Recommended PCB Layout
(PCB TOLERANCE ±0.05)

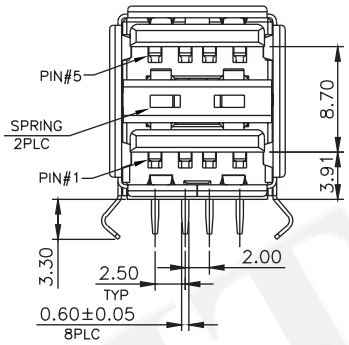

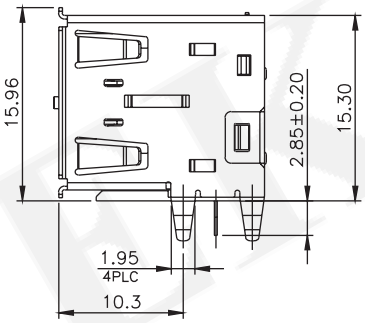

P/N.:5US2A22RF-204S0BUAH1
Old P/N:USB-002-AB-L

USB A Type Female 2 Ports Dip Vertical Type 8P

Specifications
Current Rating: 1.5A
Contact Resistance: 30mΩ Max
Insulation Resistance: 1000mΩ Min.
Dielectric Withstanding Voltage: 500 V AC / Minute
Operation Temperature: -25°c To +85°c

Material
Housing: P.B.T UL94V-0
Contact : Copper Alloy
Shell: Copper Alloy

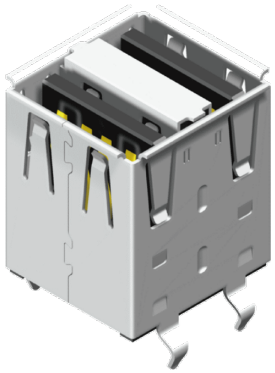

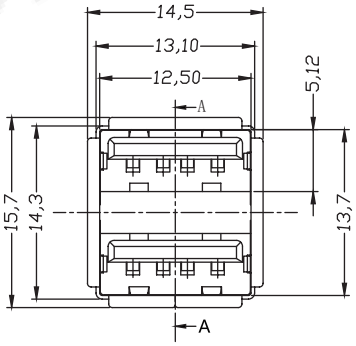

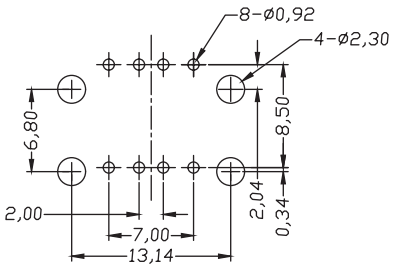

Recommended PCB Layout
(PCB TOLERANCE ±0.05)

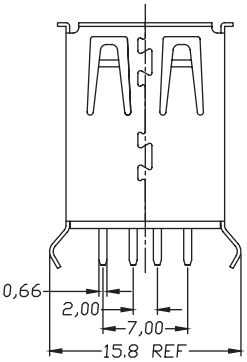

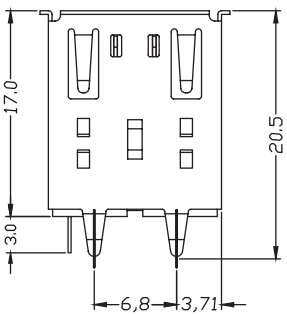

P/N.:5US2A25DF-204S0XLA71
Old P/N:USB-002K-A1X-L ***B:Black W:White***

USB A Type Female 3 Ports Dip R/A Type 12P

Specifications
Current Rating: 0.5A
Voltage Rating: 30V AC
Contact Resistance: 30mΩ Max
Insulation Resistance: 1000mΩ Min.
Dielectric Withstanding Voltage: 750 V AC / Minute
Operation Temperature: -55°c To +85°c

Material
Housing: PA6T+30%GF, UL94V-0
Contact : Phosphor Bronze
Shell: Stainless Steel, Nickled Plated

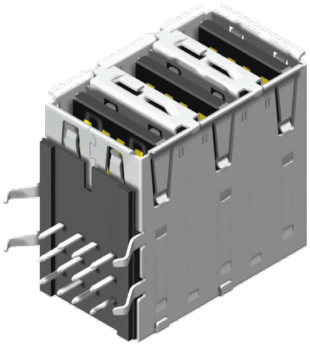

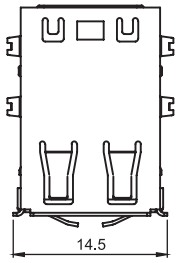

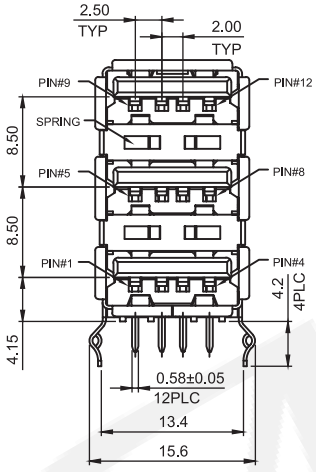

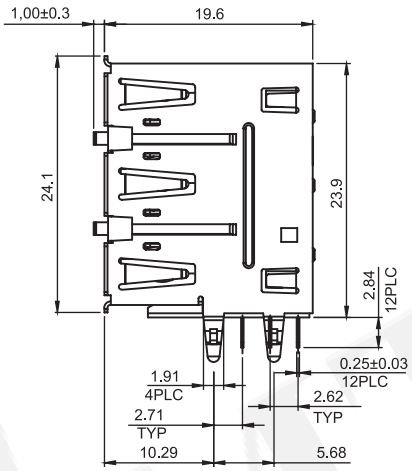

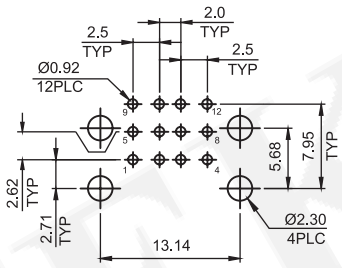

Recommended PCB Layout
(PCB TOLERANCE ±0.05)

P/N.:5US2A21RF-304XXBUAH1

S0: Selective
SD:Selective 30u"

Old P/N:USB-001K-AW-L

USB A Type Female 4 Ports Dip R/A Type 16P

Specifications
Contact Resistance: 50mΩ Max
Insulation Resistance: 1000mΩ Min.
Dielectric Withstanding Voltage: 500 V AC / Minute
Operation Temperature: -25°c To +85°c

Material
Housing: PBT, UL 94V-0
Contact : Brass
Shell: Stainless Steel

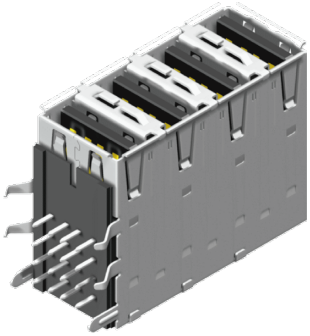

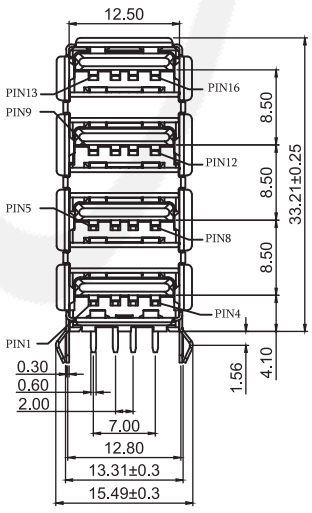

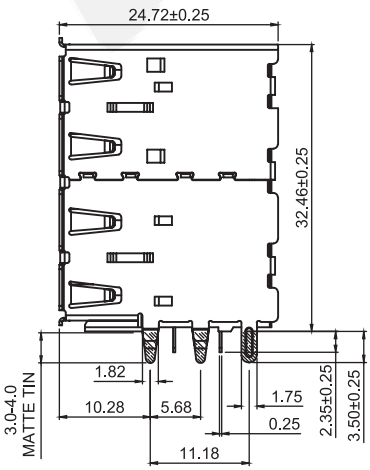

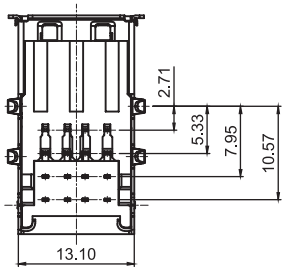

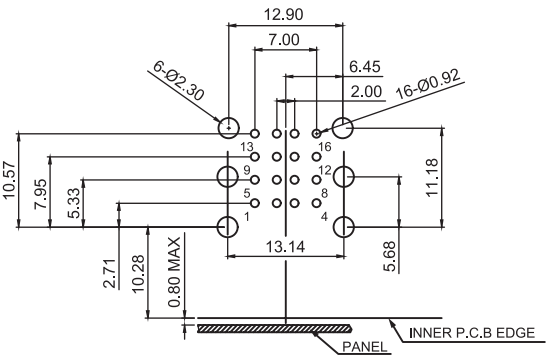

Recommended PCB Layout
(PCB TOLERANCE ±0.05)

P/N.:5US2A21RF-404SMBLAH1

Old P/N:USB-004-AX-L

USB A Type Male Solder Type 4P

Specifications
Current Rating: 1.0A
Voltage Rating: 500V AC
Contact Resistance: 30mΩ Max
Insulation Resistance: 1000mΩ Min. at DC 500V
Dielectric Withstanding Voltage: 500 V AC / Minute
Operation Temperature: -55°c To +105°c

Material
Housing: PBT, UL94V-0
Contact : Brass
Shell: Cold Rolled Steel

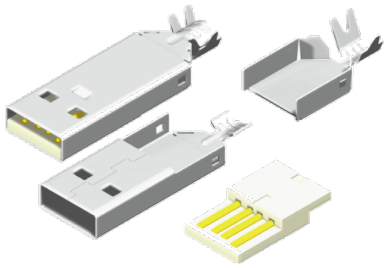

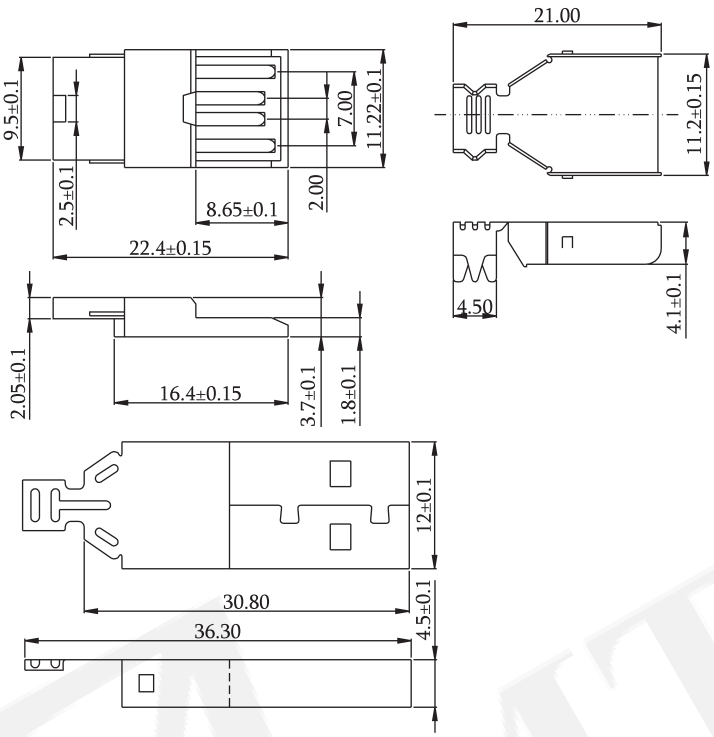

P/N.:5US2A17SM-104S0XLBC1
Old P/N:USB-MSL-AX-L ***B:Black W:White***

USB A Type Male Solder Type 4P

Specifications
Current Rating: 1.0A
Contact Resistance: 30mΩ Max
Insulation Resistance: 1000mΩ Min.
Dielectric Withstanding Voltage: 500 V AC / Minute
Operation Temperature: -55°c To +105°c

Material
Housing: PBT UL94V-0
Contact : Brass
Shell: SPCC



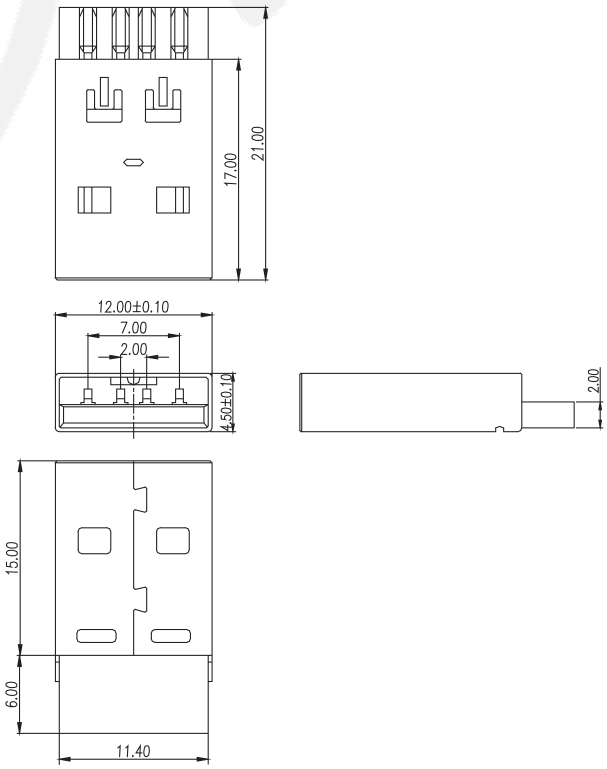

P/N.:5US2A18SM-104S0XLXC1
B:Black W:White

USB A Type Male SMT R/A Type 4P

Specifications
Current Rating: 1.0A
Contact Resistance: 30mΩ Max
Insulation Resistance: 1000mΩ Min. at DC 500V
Dielectric Withstanding Voltage: 30 V AC / Minute
Operation Temperature: -55°c To +105°c

Material
Housing: LCP, UL 94-V0
Contact : Brass
Shell: Cold Rolled Steel

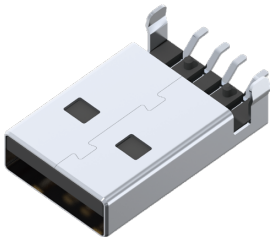

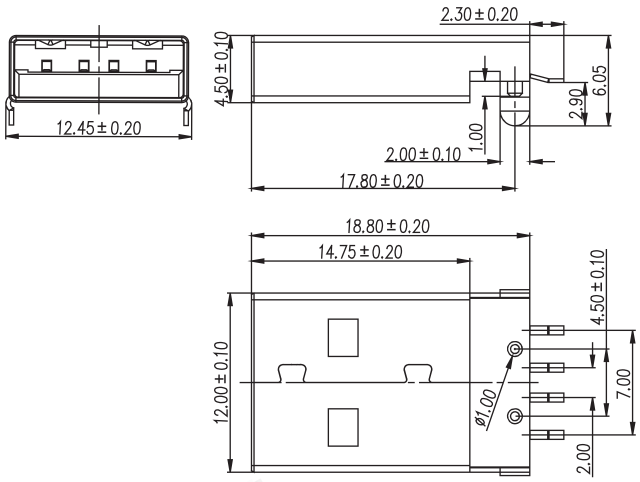

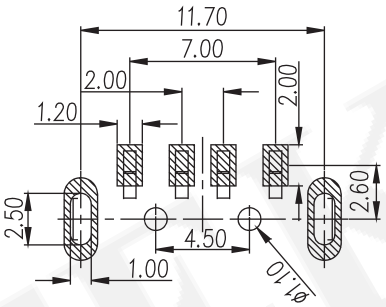

Recommended PCB Layout
(PCB TOLERANCE ±0.05)

P/N.:5US2A12MM-104S0XUXC1

W:White
B:Black
A:Tray W/O Cap
H:Tape & Reel

USB A Type Male Dip R/A Type 4P

Specifications
Current Rating: 1.0A
Voltage Rating: 30V AC
Contact Resistance: 30mΩ Max
Insulation Resistance: 1000mΩ Min.
Dielectric Withstanding Voltage: 30 V AC / Minute
Operation Temperature: -55°c To +105°c

Material
Housing: PBT UL94V-0
Contact : Brass
Shell: Cold Rolled Steel

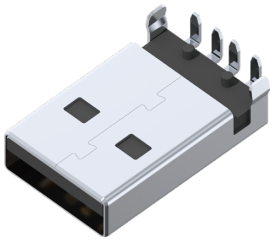

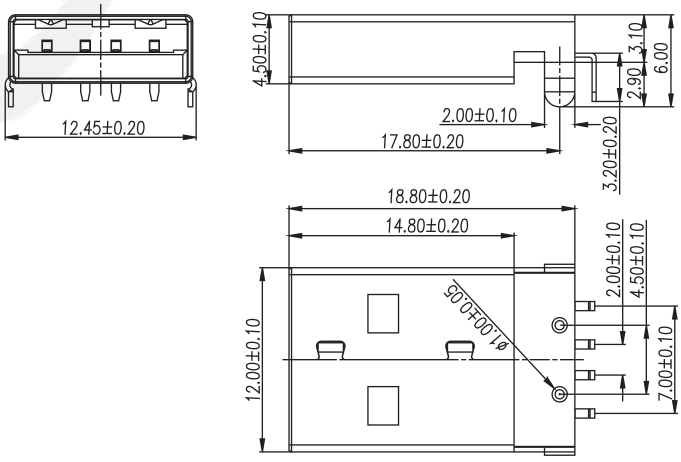

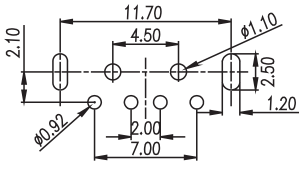

Recommended PCB Layout
(PCB TOLERANCE ±0.05)

P/N.:5US2A09RM-104S0XLAC1

Old P/N:USB-001MD-AX-L
B:Black W:White

USB B Type Female Dip R/A Type 4P

Specifications
Current Rating: 1.5A
Voltage Rating: 30V AC
Contact Resistance: 30mΩ Max
Insulation Resistance: 1000mΩ Min. at DC 500V
Dielectric Withstanding Voltage: 500 VAC / Minute
Operation Temperature: -25°c To +85°c

Material
Housing: PBT, UL94V-0
Contact : Brass
Shell: Steel

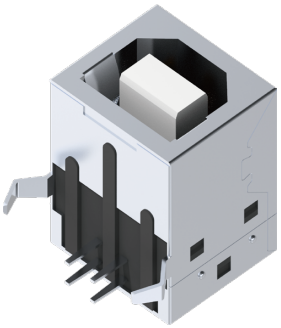

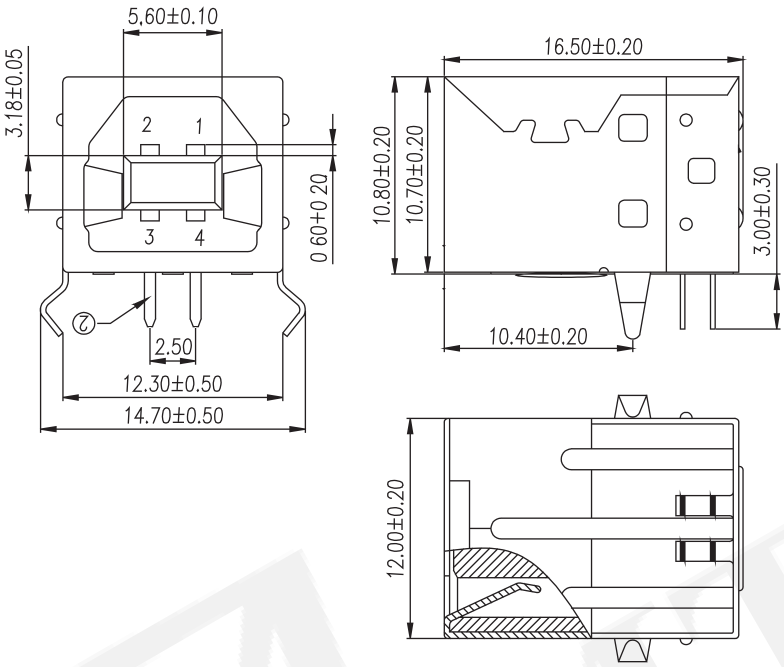

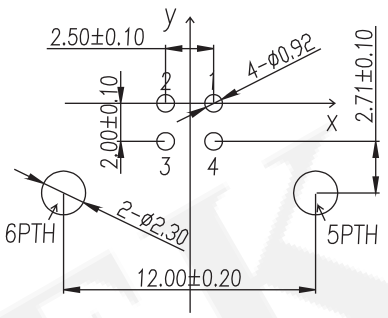

Recommended PCB Layout
(PCB TOLERANCE ±0.05)

P/N.:5US2B01RF-104XXXLAC1

S0: Selective
SD:Selective 30u"
W:White
B:Black

Old P/N:USB-001-BX-L

USB B Type Female Dip Vertical Type 4P

Specifications
Current Rating: 1.5A
Voltage Rating: 30V AC
Contact Resistance: 30mΩ Max
Insulation Resistance: 1000mΩ Min. at DC 500V
Dielectric Withstanding Voltage: 500 VAC / Minute
Operation Temperature: -45°c To +85°c

Material
Housing: PBT
Contact : Brass
Shell: Brass

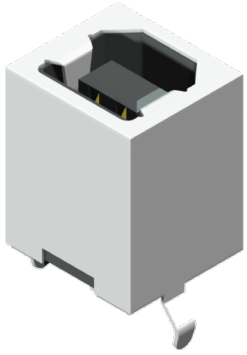

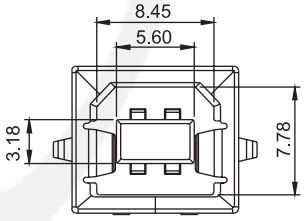

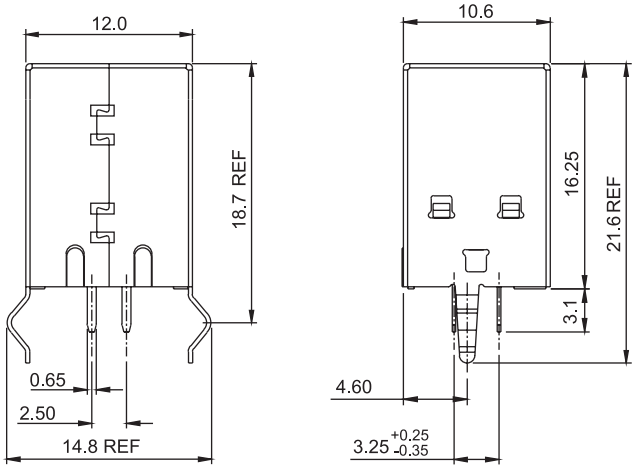

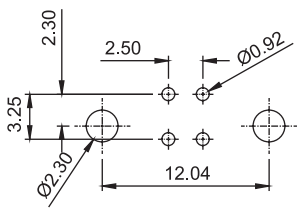

Recommended PCB Layout
(PCB TOLERANCE ±0.05)

P/N.:5US2B04DF-104S0BLAD1

Old P/N:USB-001K-BX-L

USB Conn. Series

RoHS

USB B Type Female SMT R/A Type 4P

Specifications
Current Rating: 1.5A
Voltage Rating: 30V AC
Contact Resistance: 30mΩ Max
Insulation Resistance: 1000mΩ Min. at DC 500V
Dielectric Withstanding Voltage: 500 VAC / Minute

Material
Housing: Nylon 9T, UL94V-0
Contact : Brass
Shell: Brass

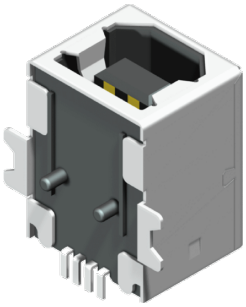

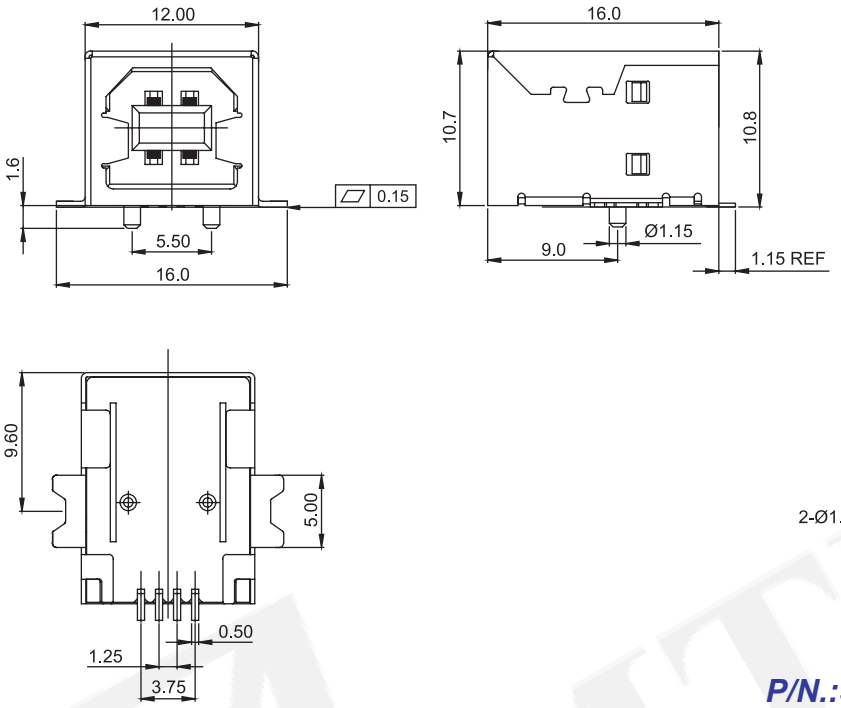

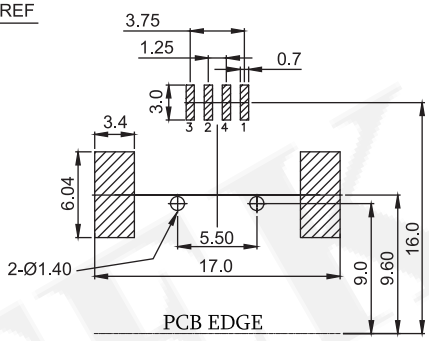

Recommended PCB Layout
(PCB TOLERANCE ±0.05)

P/N.:5US2B05MF-104S0XUH71

Old P/N:USB-001H-BX-U ***B:Black W:White***

USB B Type Female SMT Vertical Type 4P

Specifications
Current Rating: 1.5A
Voltage Rating: 30V AC
Contact Resistance: 20mΩ Max
Insulation Resistance: 1000mΩ Min. at DC 500V
Dielectric Withstanding Voltage: 750 VAC / Minute
Operation Temperature: -40°c To +105°c

Material
Housing: Nylon 9T, UL94V-0
Contact : Brass
Shell: Brass, Nickel Plated

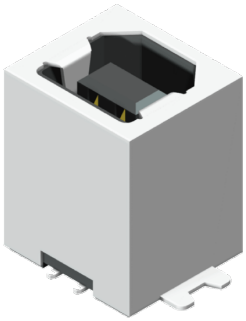

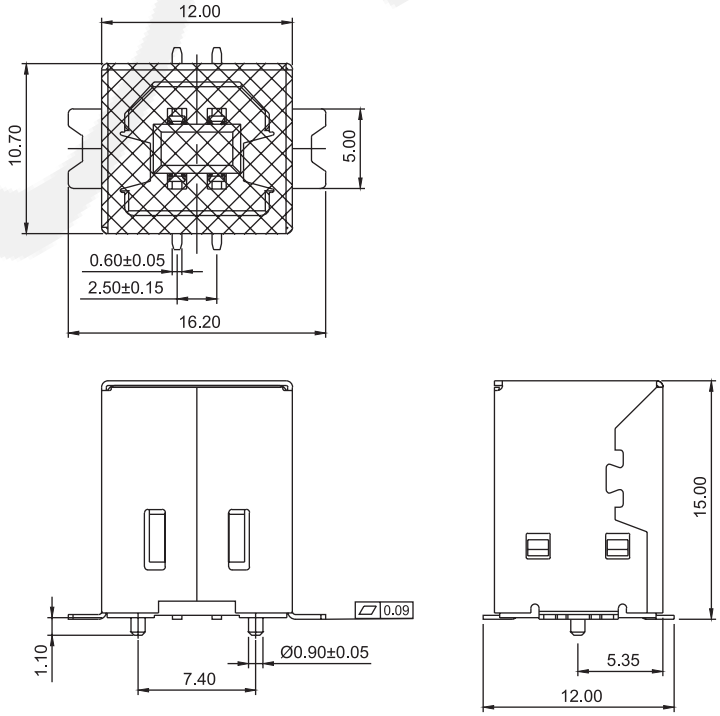

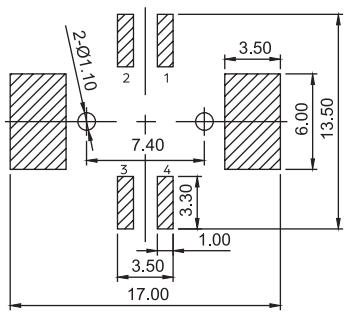

Recommended PCB Layout
(PCB TOLERANCE ±0.05)

P/N.:5US2B06GF-104S0XUMH1

Old P/N:USB-001KH-BX-U ***B:Black W:White***

糧德精密有限公司
Amtek Technology Co., Ltd

Tel : +886-2-2260-6878 Fax : +886-2-2260-7177
E-mail : web@amtek-co.com.tw
https://www.amtek-co.com.tw
Add : No.3, Ln. 33, Rixin St., Tucheng Dist.,
New Taipei City 23666, Taiwan
新北市土城區日新街33巷3號

IATF 16949:2016

ISO 9001:2015

ISO 14001:2015

ISO 14064-1:2018

ECBT2-E322618

XCFR2-E346158