PCB Terminal

10-1~10-23 • PCB Terminal

AMTEK Technology Co., Ltd

PCB Terminal 45° Type Flat Pin

Material
Contact Pin: Brass / Tin Plated

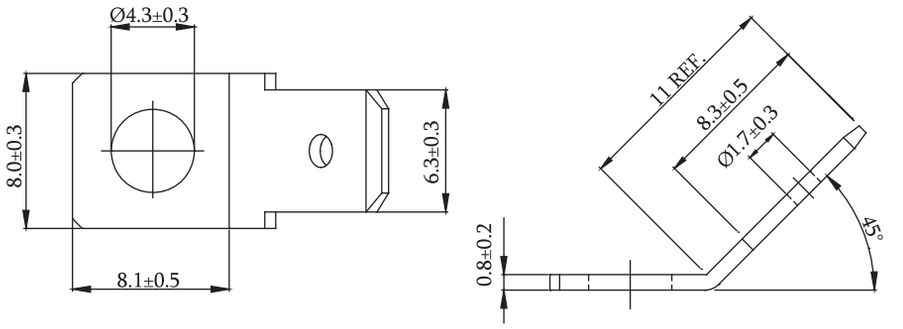

P/N.:5GBF-001T0-A1

Material
Contact Pin: Brass / Tin Plated

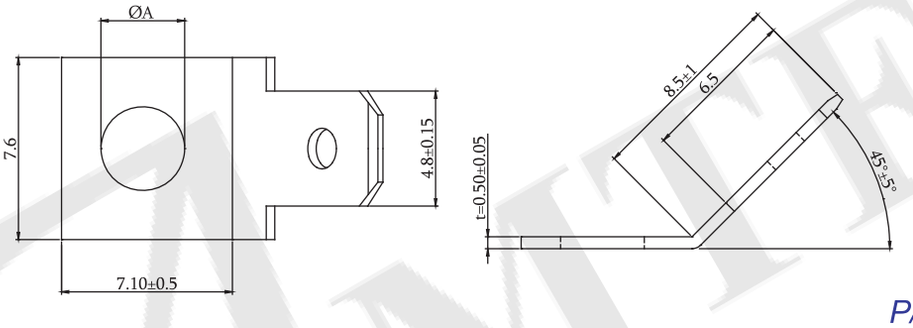

P/N.:5GBF-002T0-AX
1: ØA=3.7 2:ØA=4.3 3:ØA=5.3

PCB Terminal L Type Flat Pin

Material
Contact Pin: Brass / Tin Plated

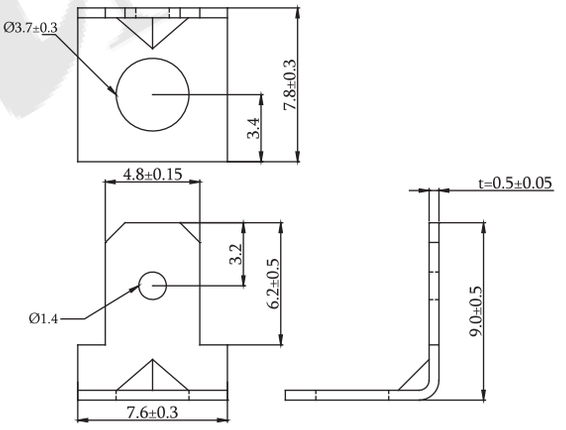

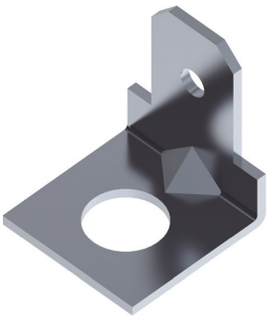

P/N.:5GBL-001T0-A1

Material
Contact Pin: Brass / Tin Plated

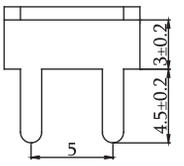

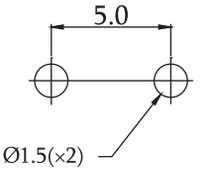

Recommended PCB Layout
(PCB TOLERANCE ±0.05)

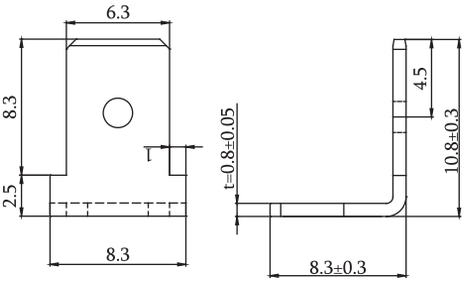

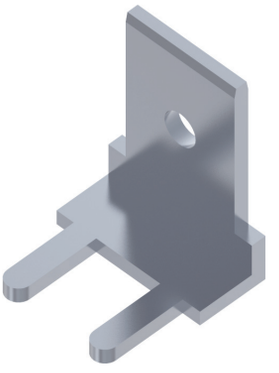

P/N.:5GBL-002T0-A1

PCB Terminal L Type Flat Pin

Material
Contact Pin: Brass / Tin Plated

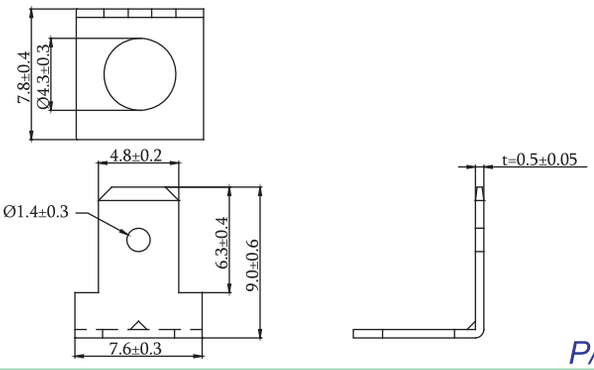

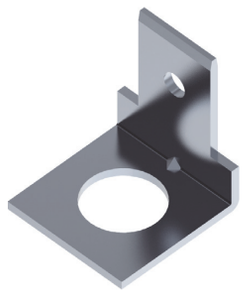

P/N.:5GBL-003T0-A1

Material
Contact Pin: Brass / Tin Plated

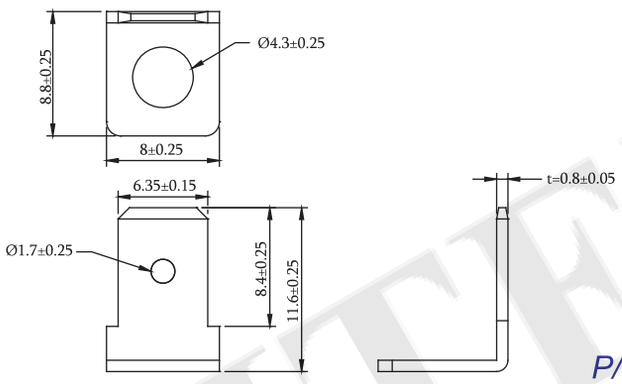

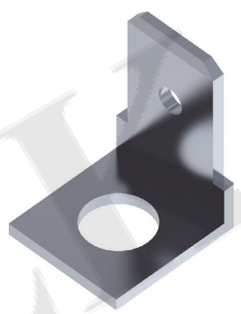

P/N.:5GBL-004T0-A1

Material
Contact Pin: Brass / Tin Plated

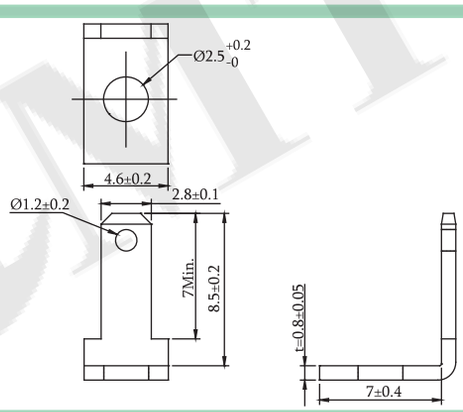

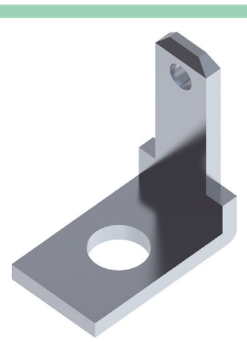

P/N.:5GBL-005T0-A1

Material
Contact Pin: Brass / Tin Plated

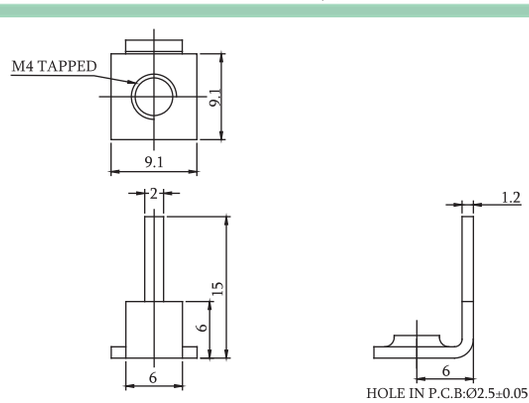

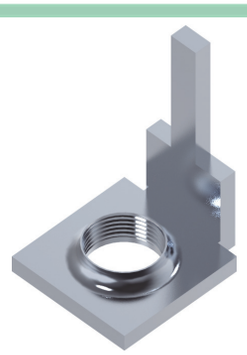

P/N.:5GBL-006T0-A1

Material
Contact Pin: Brass / Tin Plated

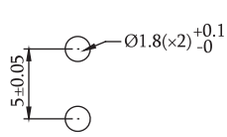

Recommended PCB Layout
(PCB TOLERANCE ±0.05)

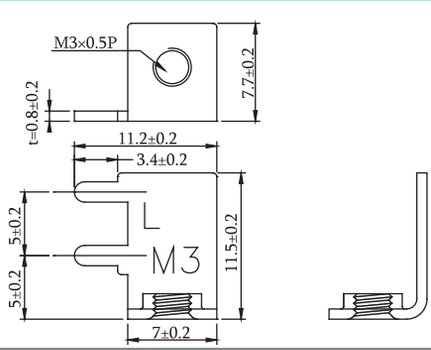

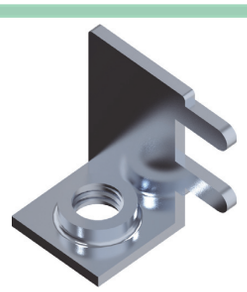

P/N.:5GBL-007T0-A1

PCB Terminal L Type Flat Pin

Material
Contact Pin: Brass / Tin Plated

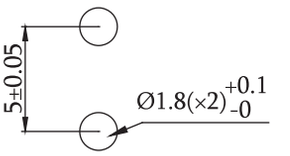

Recommended PCB Layout
(PCB TOLERANCE ±0.05)

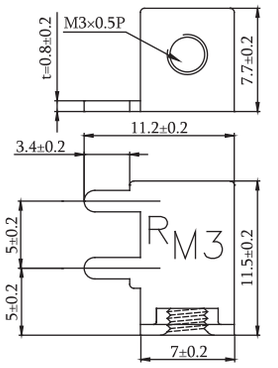

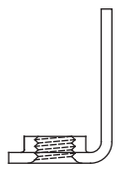

P/N.:5GBL-008T0-A1

Material
Contact Pin: Brass / Tin Plated

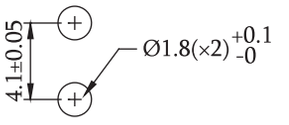

Recommended PCB Layout
(PCB TOLERANCE ±0.05)

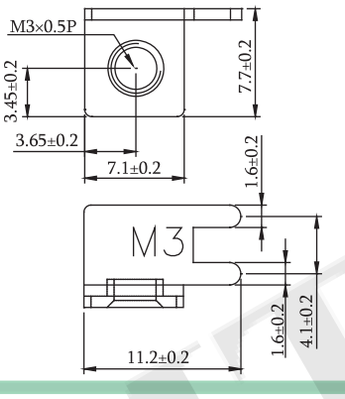

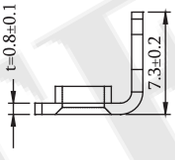

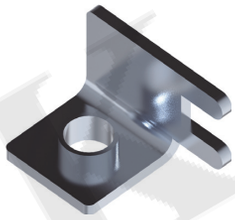

P/N.:5GBL-009T0-A1

Material
Contact Pin: Brass / Tin Plated

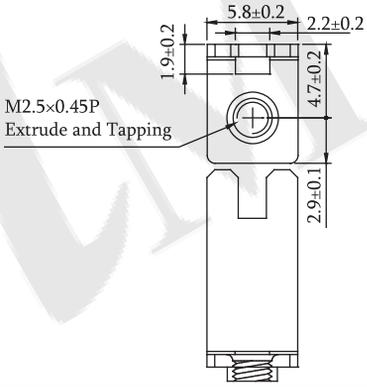

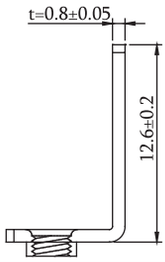

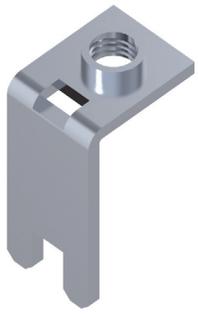

P/N.:5GBL-010T0-A1

Material
Contact Pin: Brass / Tin Plated

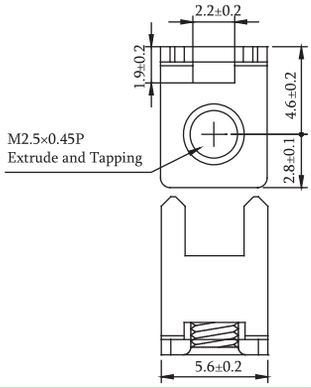

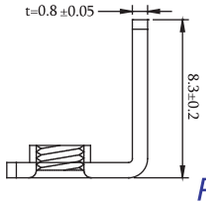

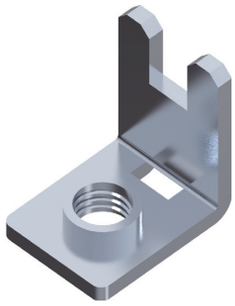

P/N.:5GBL-011T0-A1

Material
Contact Pin: Brass / Tin Plated

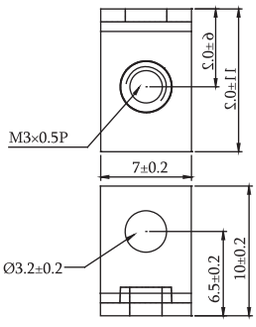

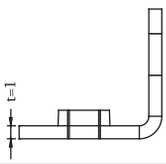

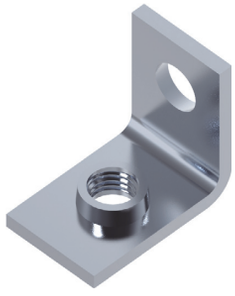

P/N.:5GBL-012T0-A1

PCB Terminal U Type Flat Pin

Material
Contact Pin: Brass / Tin Plated

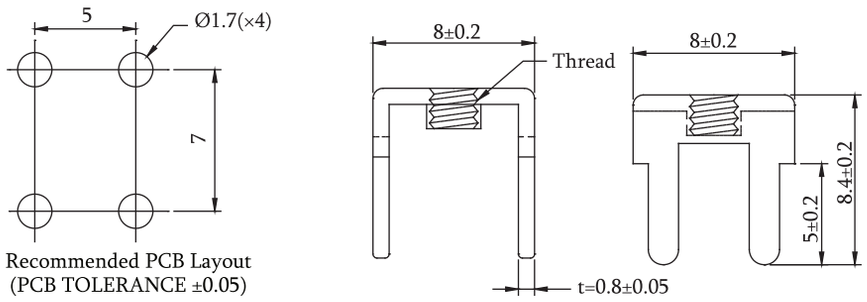

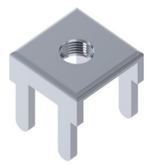

P/N.:5GBM-001T0-AX
1: Thread=M3×0.5P
2:Thread=M4×0.7P
3:Thread=UNC6-32
4:Thread=5/32"

Material
Contact Pin: Brass

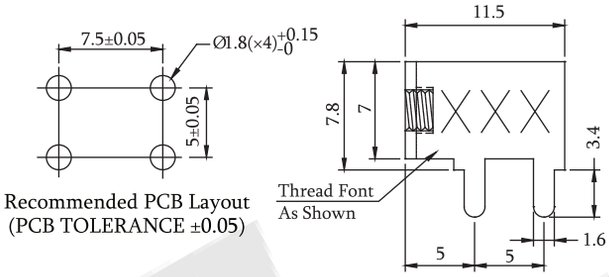

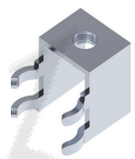

Part No.	Tapped	Finish	Thread Font
5GBM-002T0-A1	M3	Tin Plated	M3
5GBM-002T0-A2	M4	Tin Plated	M4
5GBM-002NI-A2	M4	Ni Plated	M4
5GBM-002T0-A3	UNC6-32	Tin Plated	632
5GBM-002NI-A3	UNC6-32	Ni Plated	632

P/N.:5GBM-002XX-AX
See Table

Material
Contact Pin: Brass / Tin Plated

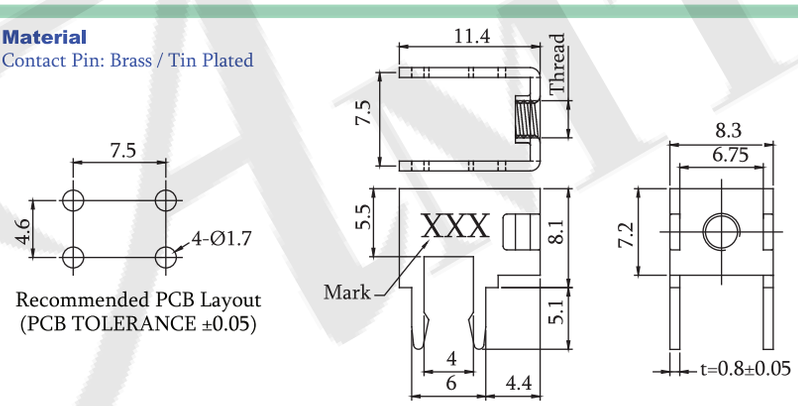

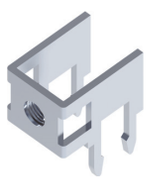

Part No.	Thread	Mark
5GBM-003T0-A1	M3×0.5	M3
5GBM-003T0-A2	M4×0.7	M4
5GBM-003T0-A3	6-32 UNC	632

P/N.:5GBM-003T0-AX
See Table

Material
Contact Pin: Brass

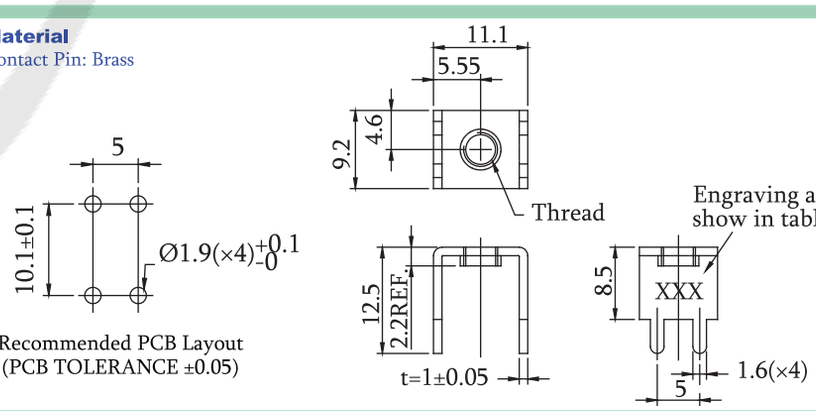

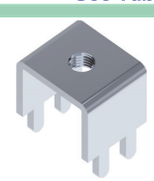

Part No.	Thread	Material	Finish	Text
5GBM-007T0-A1	M3×0.5	Brass	Tin Plated	M3
5GBM-007NI-A1	M3×0.5	Brass	Nickel Plated	M3
5GBM-007T0-A2	M4×0.7	Brass	Tin Plated	M4
5GBM-007NI-A2	M4×0.7	Brass	Nickel Plated	M4
5GBM-007TM-A2	M4×0.7	Brass	Matte Tin Plated Over Nickel Base	M4
5GBM-007T0-A3	M5×0.8	Brass	Tin Plated	M5
5GBM-007T0-A4	#6-32	Brass	Tin Plated	632

P/N.:5GBM-007XX-AX
See Table

Material
Contact Pin: Brass / Tin Plated

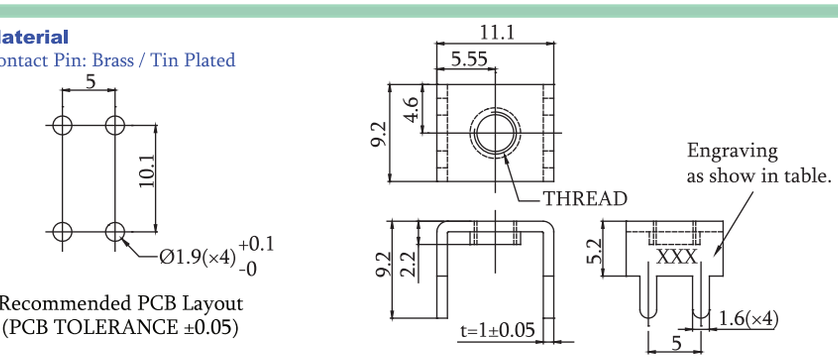

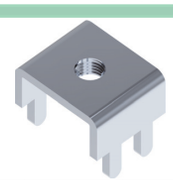

Part No.	Thread	Text
5GBM-008T0-A1	M3×0.5	M3
5GBM-008T0-A2	M4×0.7	M4
5GBM-008T0-A3	#6-32	632

P/N.:5GBM-008T0-AX
See Table

PCB Terminal U Type Flat Pin

Material
Contact Pin: Brass / Tin Plated

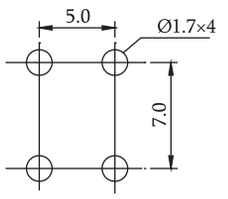

Recommended PCB Layout
(PCB TOLERANCE ±0.05)

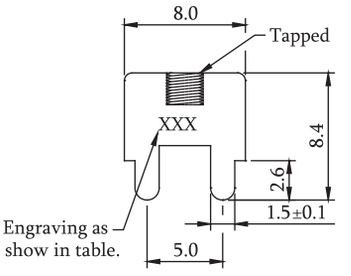

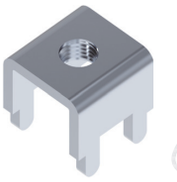

Part No.	Tapped	Finish	Engraving
5GBM-009T0-A1	M3	Tin Plated	M3
5GBM-009NI-A1	M3	Nickel Plated	M3
5GBM-009T0-A2	M3.5	Tin Plated	M3.5
5GBM-009T0-A3	M4	Tin Plated	M4
5GBM-009T0-A4	UNC6-32	Tin Plated	632

P/N.:5GBM-009XX-AX
See Table

Material
Contact Pin: Brass / Tin Plated

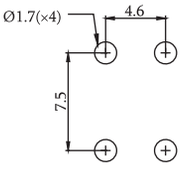

Recommended PCB Layout
(PCB TOLERANCE ±0.05)

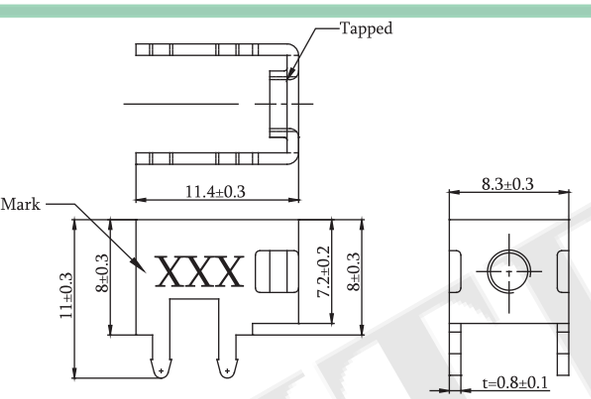

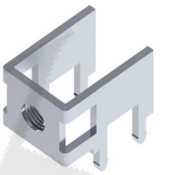

Part No.	Tapped	Mark
5GBM-010T0-A1	M3×0.5P	M3
5GBM-010T0-A2	M3.5×0.6P	M3.5
5GBM-010T0-A3	M4×0.7P	M4
5GBM-010T0-A4	6-32UNC	632

P/N.:5GBM-010T0-AX
See Table

Material
Contact Pin: Brass / Tin Plated

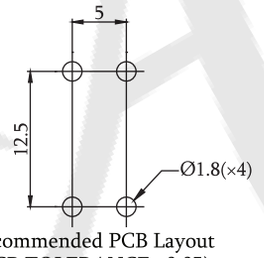

Recommended PCB Layout
(PCB TOLERANCE ±0.05)

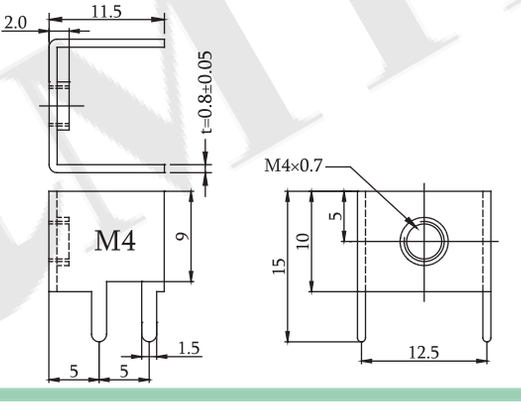

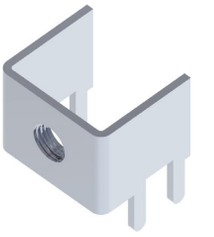

P/N.:5GBM-011T0-A1

Material
Contact Pin: Brass / Tin Plated

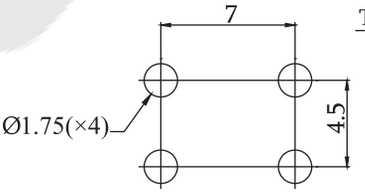

Recommended PCB Layout
(PCB TOLERANCE ±0.05)

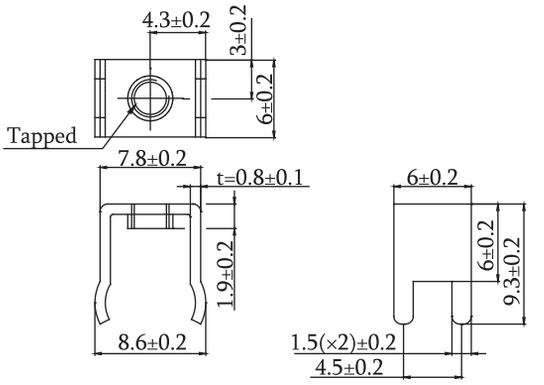

Part No.	Tapped
5GBM-012T0-A1	M3×0.5P
5GBM-012T0-A2	M4×0.7P

P/N.:5GBM-012T0-AX
See Table

Material
Contact Pin: Brass / Tin Plated

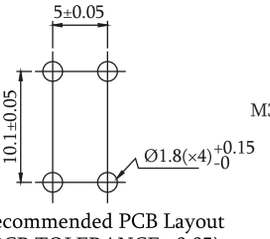

Recommended PCB Layout
(PCB TOLERANCE ±0.05)

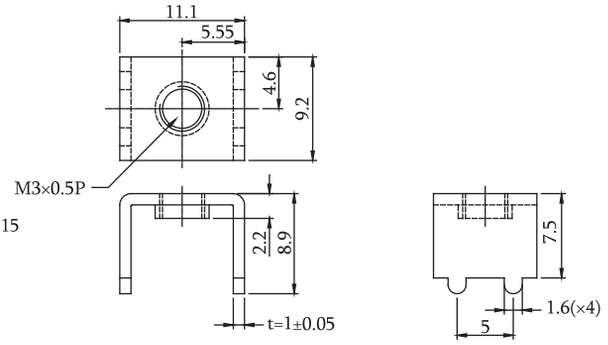

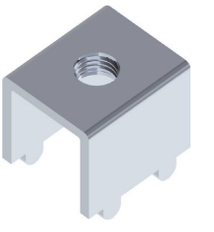

P/N.:5GBM-013T0-A1

PCB Terminal U Type Flat Pin

Material
Contact Pin: Brass / Tin Plated

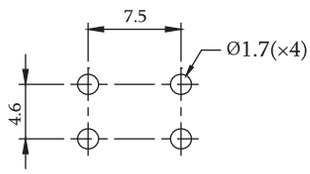

Recommended PCB Layout
(PCB TOLERANCE ±0.05)

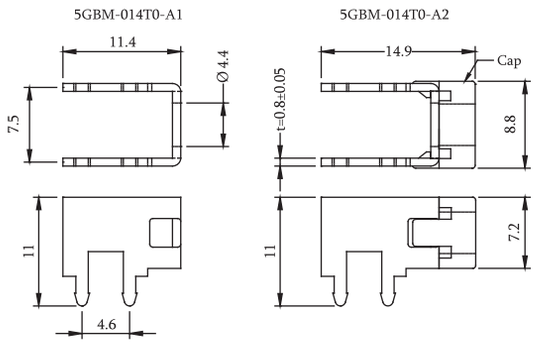

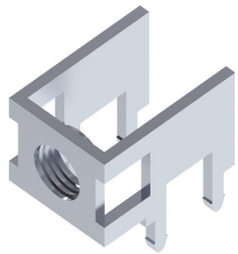

P/N.:5GBM-014T0-AX

Material
Contact Pin: Brass / Tin Plated

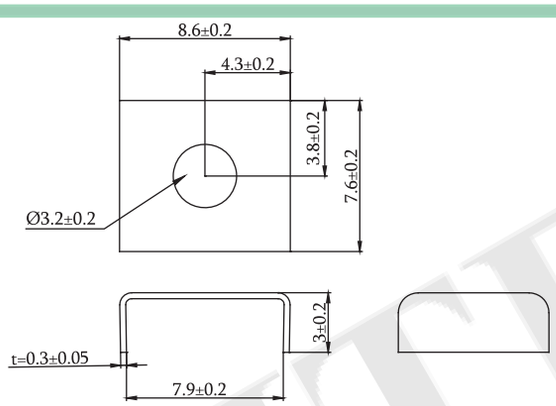

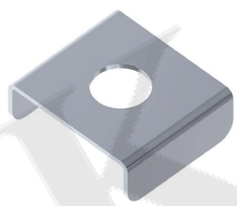

P/N.:5GBM-015T0-A1

Material
Contact Pin: Brass / Tin Plated

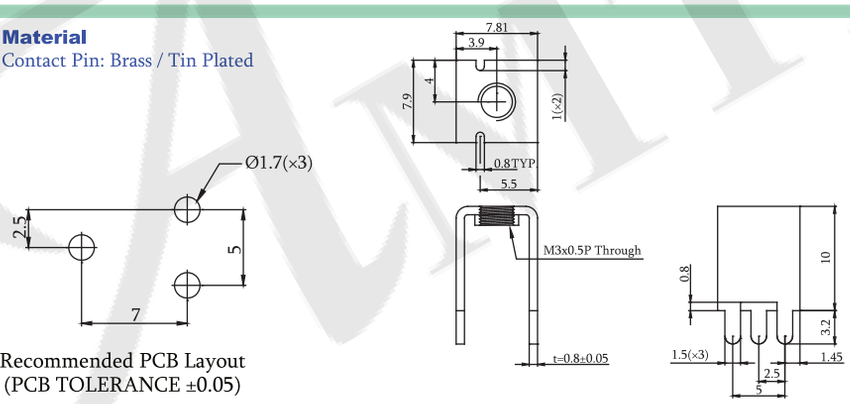

Recommended PCB Layout
(PCB TOLERANCE ±0.05)

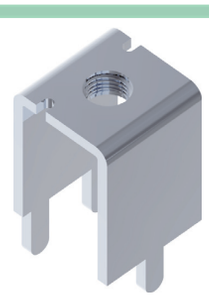

P/N.:5GBM-016T0-A1

Material
Contact Pin: Brass / Tin Plated

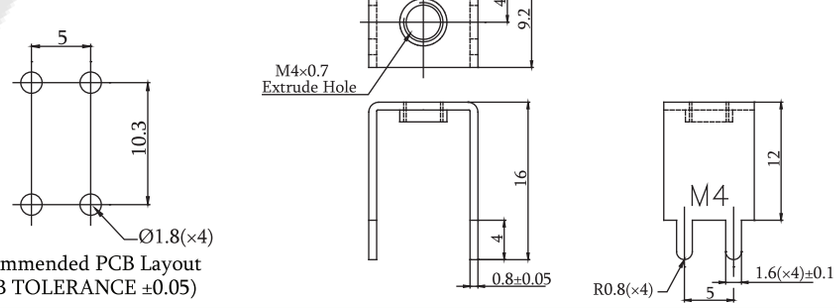

Recommended PCB Layout
(PCB TOLERANCE ±0.05)

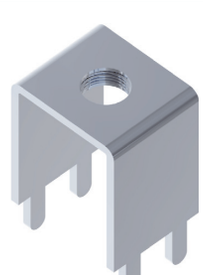

P/N.:5GBM-017T0-A1

Material
Contact Pin: Brass / Tin Plated

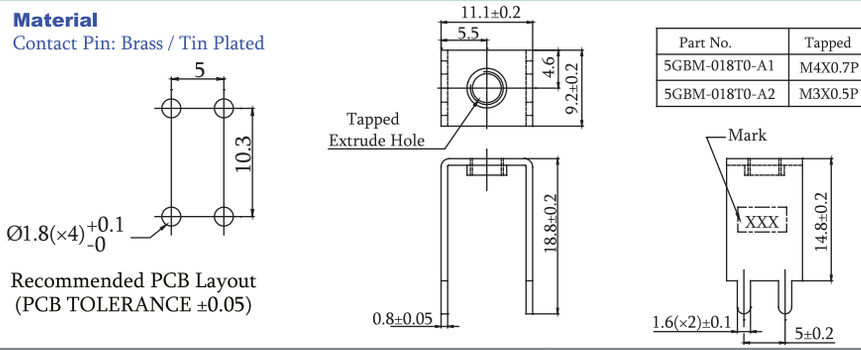

Part No.	Tapped	Mark
5GBM-018T0-A1	M4X0.7P	M4
5GBM-018T0-A2	M3X0.5P	M3

Recommended PCB Layout
(PCB TOLERANCE ±0.05)

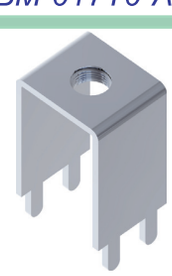

P/N.:5GBM-018T0-AX
See Table

PCB Terminal U Type Flat Pin

Material
Contact Pin: Brass / Tin Plated

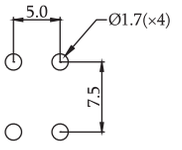

Recommended PCB Layout
(PCB TOLERANCE ±0.05)

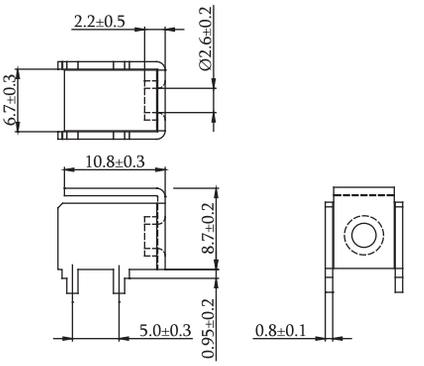

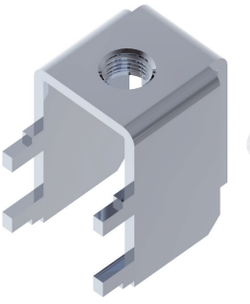

P/N.:5GBM-019XX-A1

Material
Contact Pin: Brass / Tin Plated

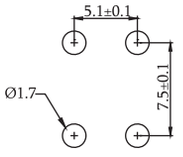

Recommended PCB Layout
(PCB TOLERANCE ±0.05)

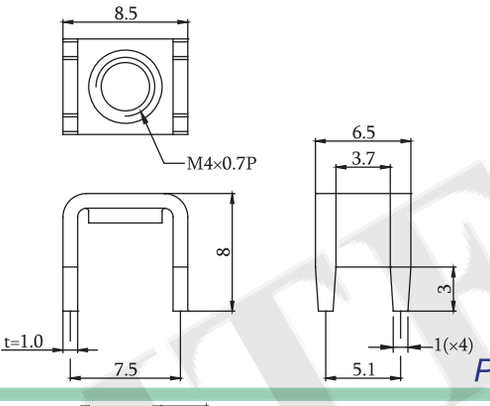

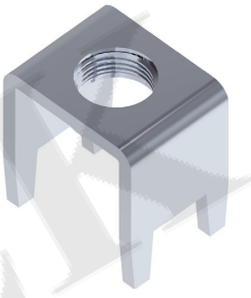

P/N.:5GBM-020T0-A1

Material
Contact Pin: Brass / Tin Plated

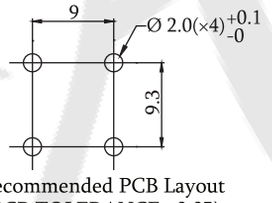

Recommended PCB Layout
(PCB TOLERANCE ±0.05)

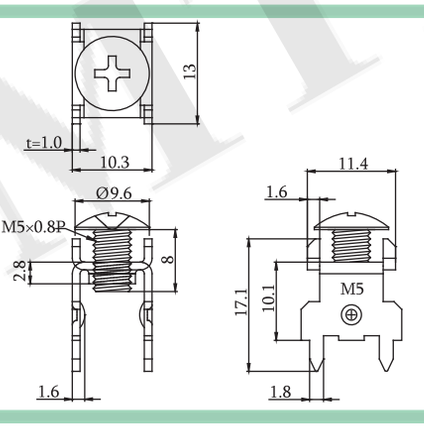

P/N.:5GBM-021T0-A1

Material
Contact Pin: Brass / Tin Plated

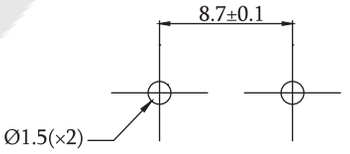

Recommended PCB Layout
(PCB TOLERANCE ±0.05)

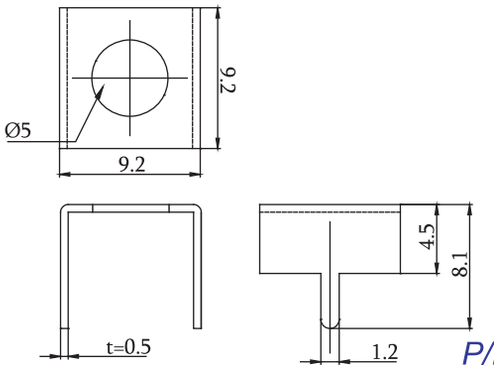

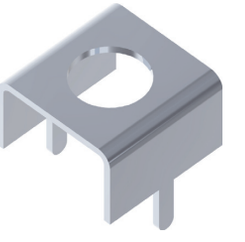

P/N.:5GBM-022T0-A1

Material
Contact Pin: Steel / Tin Plated

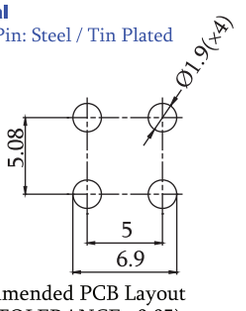

Recommended PCB Layout
(PCB TOLERANCE ±0.05)

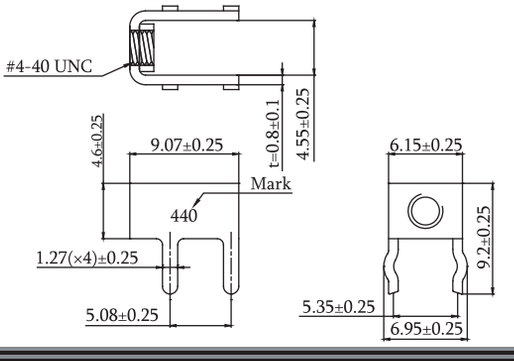

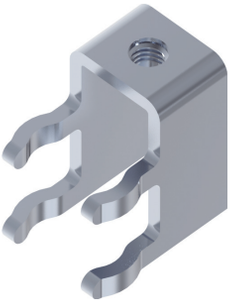

P/N.:5GBM-023T0-A1

PCB Terminal U Type Flat Pin

Material
Contact Pin: SPCC / Tin Plated

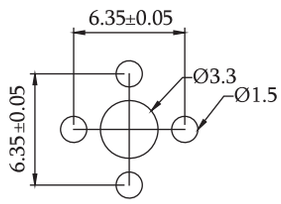

Recommended PCB Layout
(PCB TOLERANCE ±0.05)

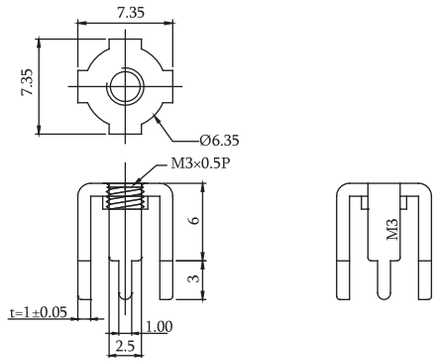

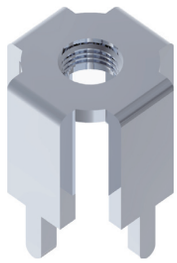

P/N.:5GBM-024T0-A1

Material
Contact Pin: Brass / Tin Plated

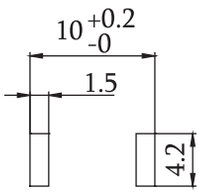

Recommended PCB Layout
(PCB TOLERANCE ±0.05)

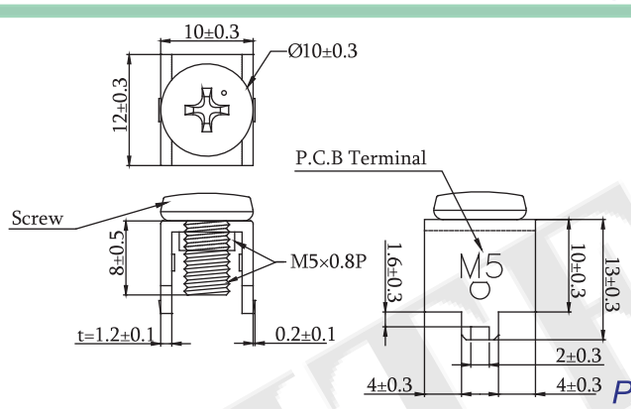

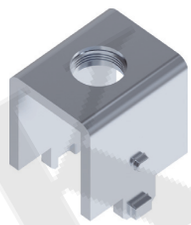

P/N.:5GBM-025T0-A1

Material
Contact Pin: Brass / Tin Plated

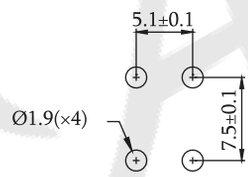

Recommended PCB Layout
(PCB TOLERANCE ±0.05)

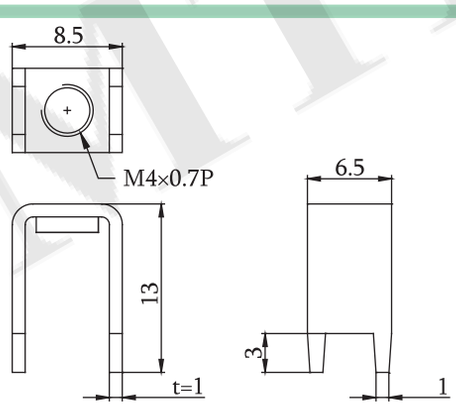

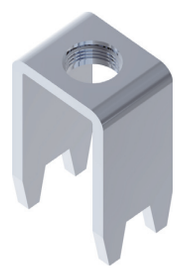

P/N.:5GBM-026T0-A1

Material
Contact Pin: Brass / Tin Plated

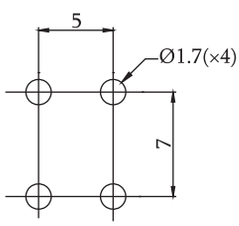

Recommended PCB Layout
(PCB TOLERANCE ±0.05)

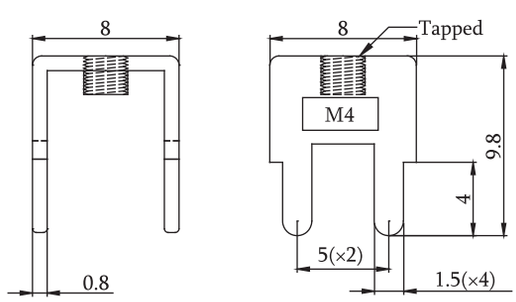

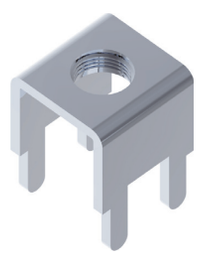

P/N.:5GBM-027T0-A1

Material
Contact Pin: Brass / Tin Plated

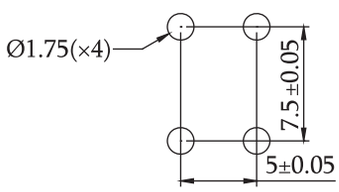

Recommended PCB Layout
(PCB TOLERANCE ±0.05)

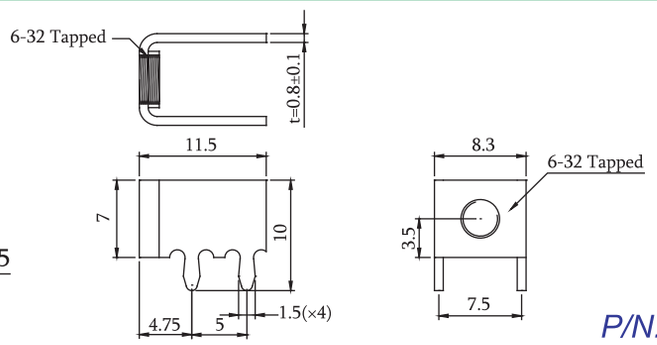

P/N.:5GBM-028T0-A1

PCB Terminal

RoHS

PCB Terminal U Type Flat Pin

Material
Contact Pin: Brass / Tin Plated

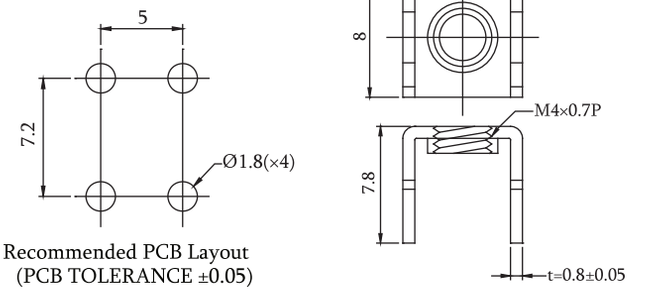

Recommended PCB Layout
(PCB TOLERANCE ±0.05)

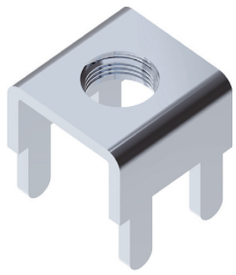

P/N.:5GBM-029T0-A1

Material
Contact Pin: Brass / Tin Plated

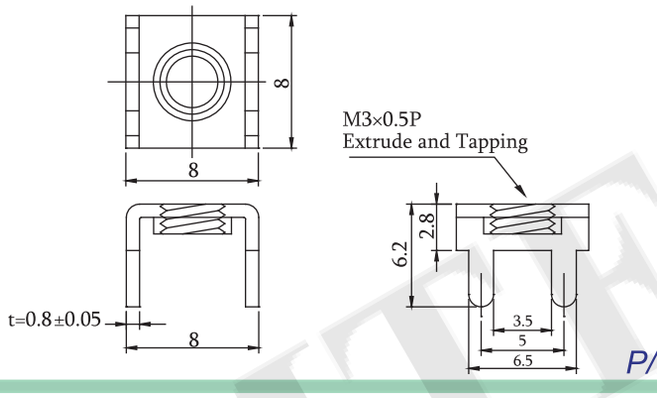

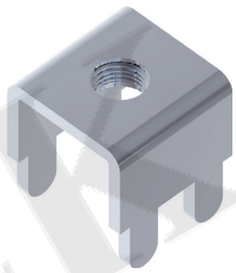

P/N.:5GBM-030T0-A1

Material
Contact Pin: Brass / Tin Plated

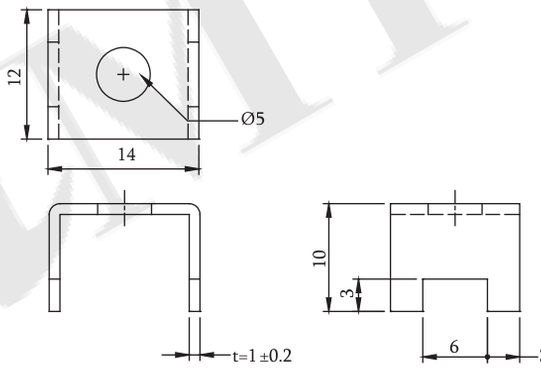

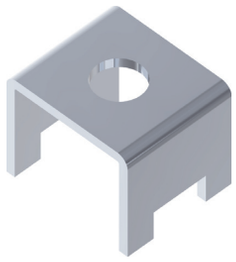

P/N.:5GBM-031T0-A1

Material
Contact Pin: Brass / Tin Plated

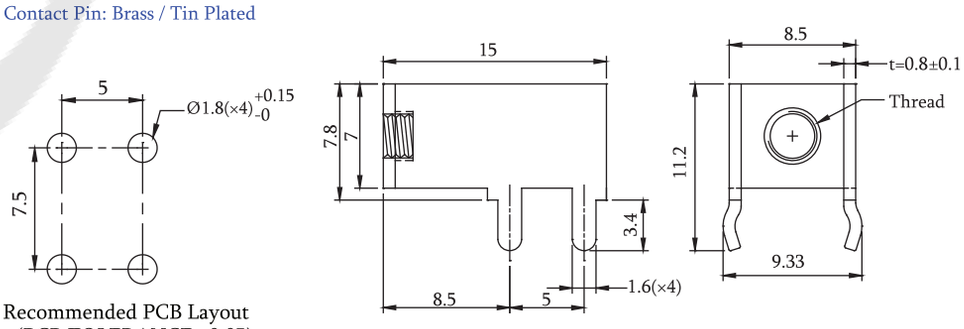

Recommended PCB Layout
(PCB TOLERANCE ±0.05)

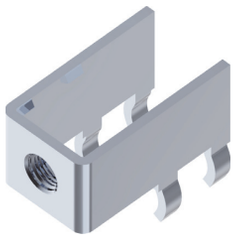

P/N.:5GBM-032T0-A1~2

Material
Contact Pin: Copper Aolly / Tin Plated

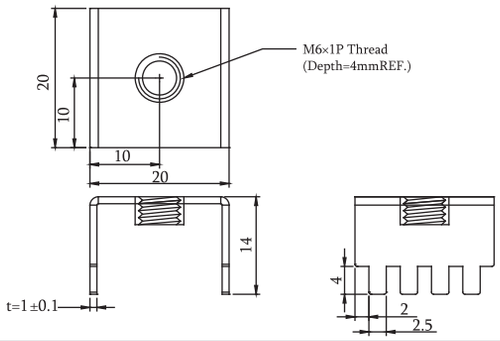

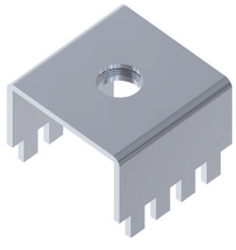

P/N.:5GBM-033T0-A1

PCB Terminal U Type Flat Pin

Material
Contact Pin: Brass / Tin Plated

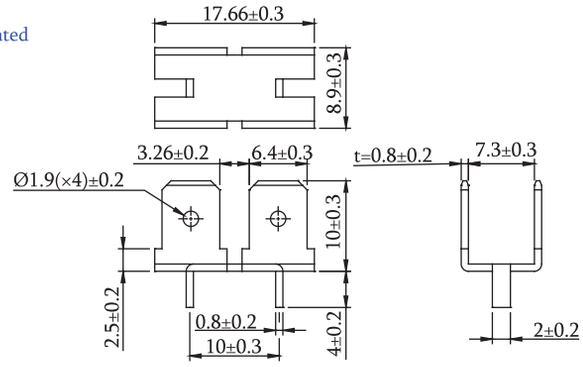

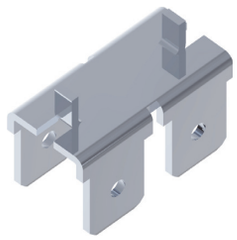

P/N.:5GBM-034T0-A1

Material
Contact Pin: Brass / Tin Plated

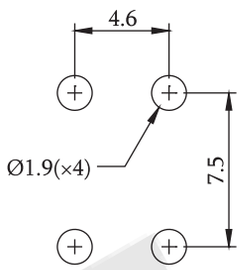

Recommended PCB Layout
(PCB TOLERANCE ±0.05)

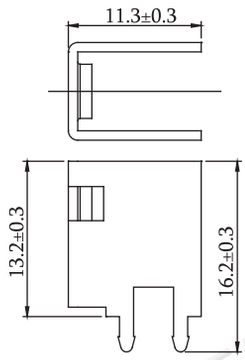

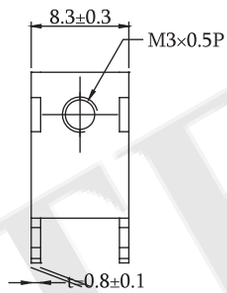

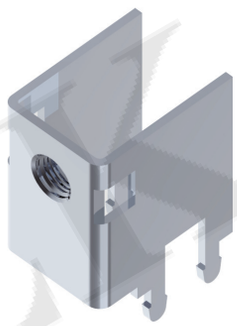

P/N.:5GBM-035T0-A1

Material
Contact Pin: Brass / Tin Plated

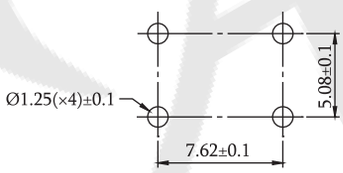

Recommended PCB Layout
(PCB TOLERANCE ±0.05)

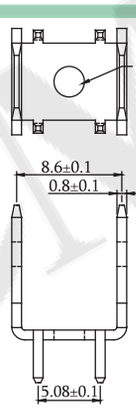

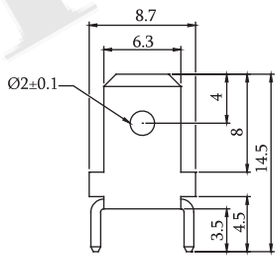

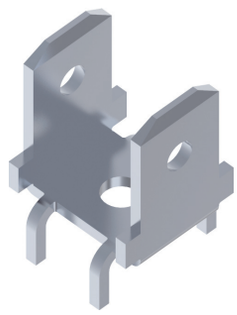

P/N.:5GBM-036T0-A1

Material
Contact Pin: Brass / Tin Plated

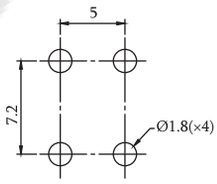

Recommended PCB Layout
(PCB TOLERANCE ±0.05)

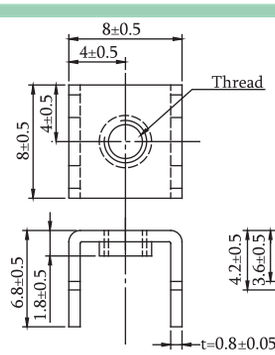

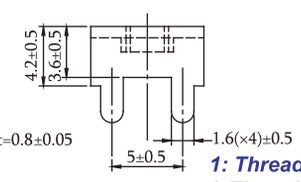

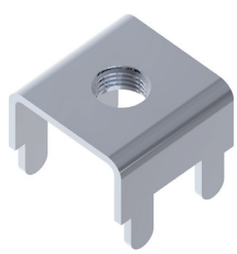

P/N.:5GBM-037T0-AX
1: Thread=M2.5×0.45 3:Thread=M4×0.7
2:Thread=M3×0.5 4:Thread=#6-32

Material
Contact Pin: Brass / Tin Plated

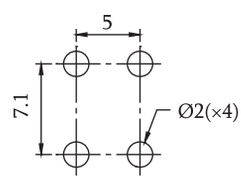

Recommended PCB Layout
(PCB TOLERANCE ±0.05)

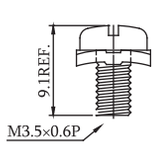

Assembly Diagram

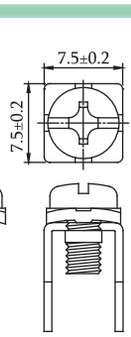

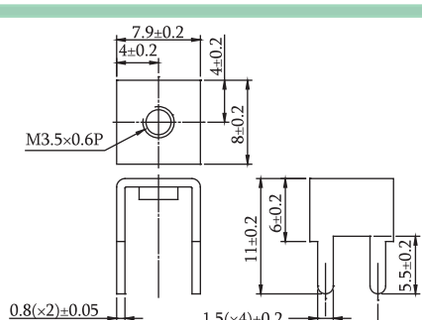

Body

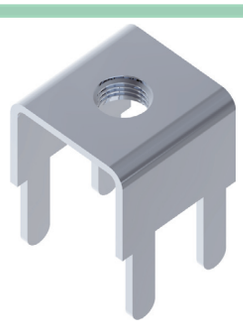

P/N.:5GBM-038T0-A1

PCB Terminal

PCB Terminal U Type Flat Pin

Material
Contact Pin: Brass / Tin Plated

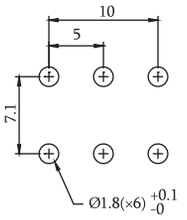

Recommended PCB Layout
(PCB TOLERANCE ±0.05)

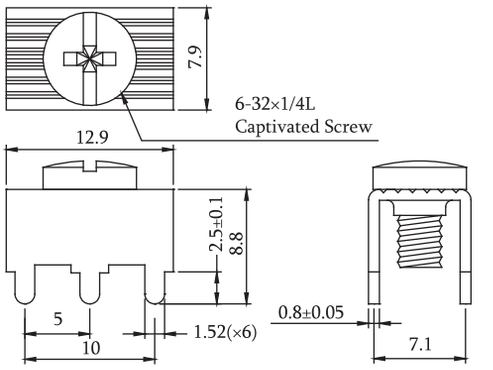

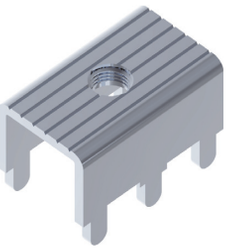

P/N.:5GBM-039T0-A1

Material
Contact Pin: Brass / Tin Plated

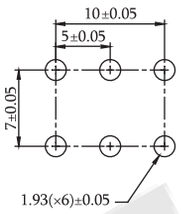

Recommended PCB Layout
(PCB TOLERANCE ±0.05)

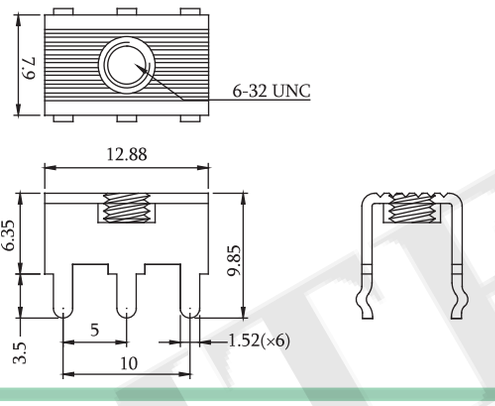

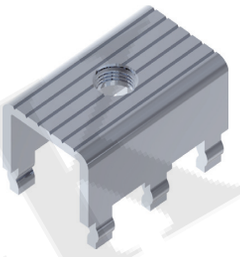

P/N.:5GBM-040T0-A1

Material
Contact Pin: Brass / Tin Plated

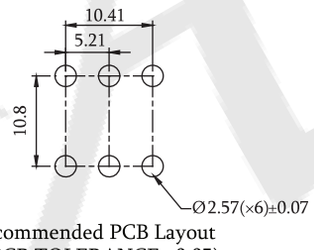

Recommended PCB Layout
(PCB TOLERANCE ±0.05)

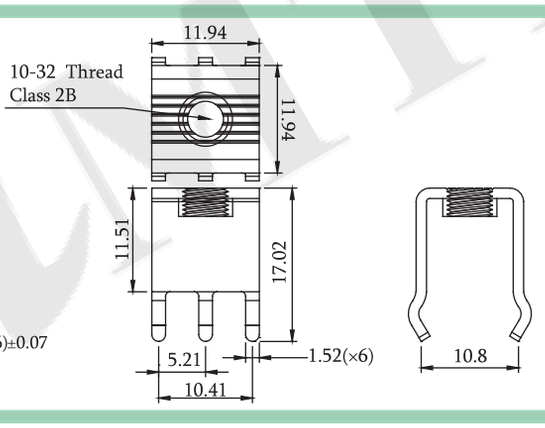

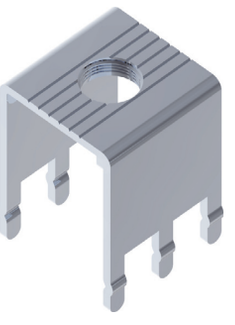

P/N.:5GBM-041T0-A1

Material
Contact Pin: Phosphor Bronze / Tin Plated

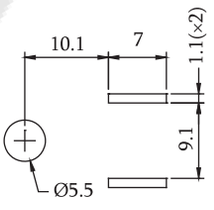

Recommended PCB Layout
(PCB TOLERANCE ±0.05)

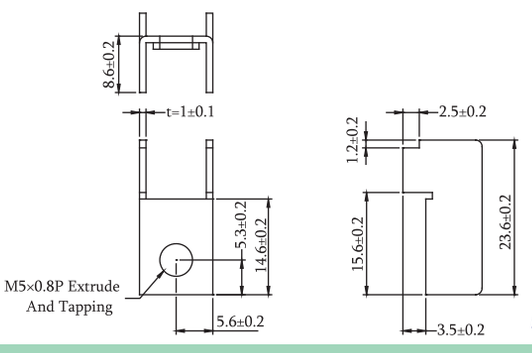

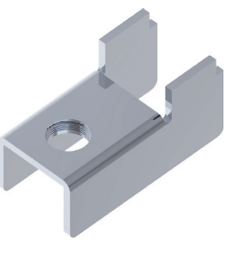

P/N.:5GBM-042T0-A1

PCB Terminal Round Flat Type Pin

Material
Contact Pin: Brass / Nickel Plated

Part No.	A	B	C	D	E	F
5GBQ-001NI-A1	3.2	2.1	6.4	12.6	4.0	0.25
5GBQ-001NI-A2	4.3	2.0	8.0	17.7	4.6	0.30
5GBQ-001NI-A3	5.2	2.1	9.9	19.6	5.1	0.30
5GBQ-001NI-A4	8.3	1.9	10.0	15.0	4.0	0.30
5GBQ-001NI-A5	9.7	2.0	13.0	21.5	4.0	0.40
5GBQ-001NI-A6	6.3	2.1	10.0	19.9	5.1	0.30
5GBQ-001NI-A7	9.0	2.0	13.0	30.0	4.0	0.30

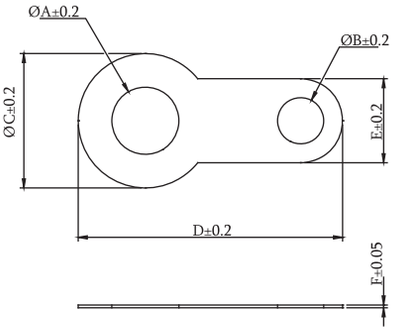

P/N.:5GBQ-001NI-AX
See Table

PCB Terminal Right Angle Type Flat Pin

Material
Contact Pin: Brass / Tin Plated

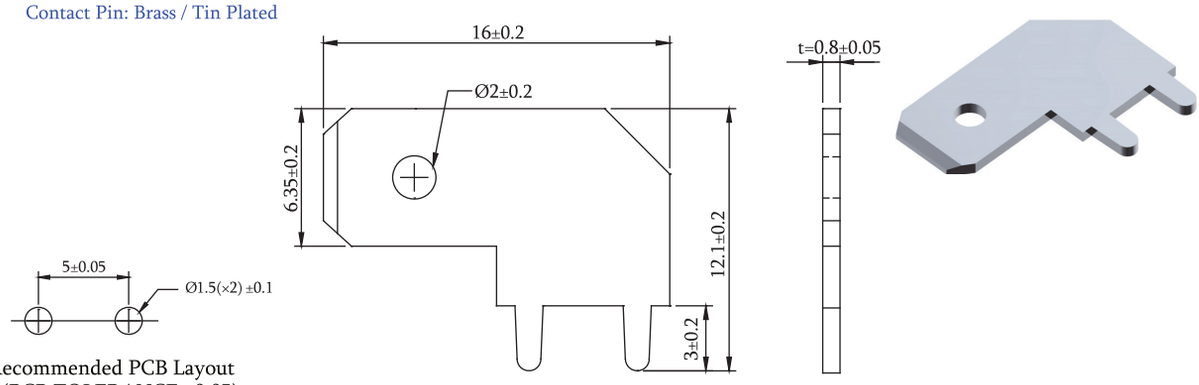

Recommended PCB Layout
(PCB TOLERANCE ±0.05)

P/N.:5GBR-001T0-A1

Material
Contact Pin: Brass / Tin Plated

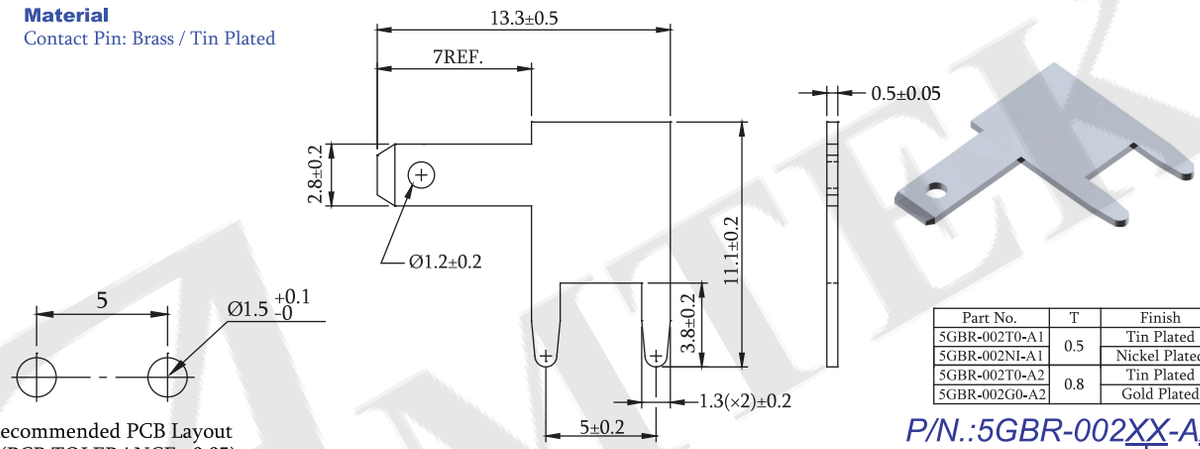

Recommended PCB Layout
(PCB TOLERANCE ±0.05)

Part No.	T	Finish
5GBR-002T0-A1	0.5	Tin Plated
5GBR-002NI-A1		Nickel Plated
5GBR-002T0-A2	0.8	Tin Plated
5GBR-002G0-A2		Gold Plated

P/N.:5GBR-002XX-AX
See Table

Material
Contact Pin: Brass / Tin Plated

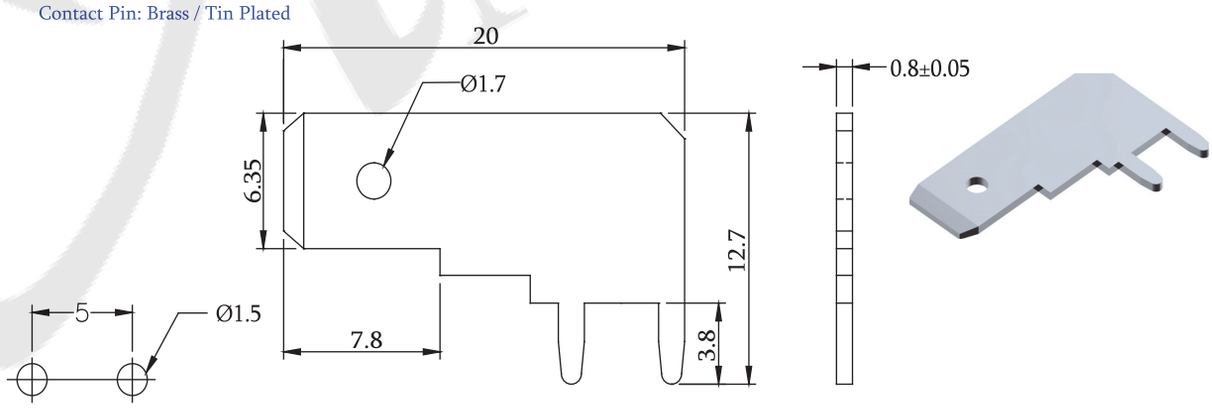

Recommended PCB Layout
(PCB TOLERANCE ±0.05)

P/N.:5GBR-004T0-A1

Material
Contact Pin: Brass / Tin Plated

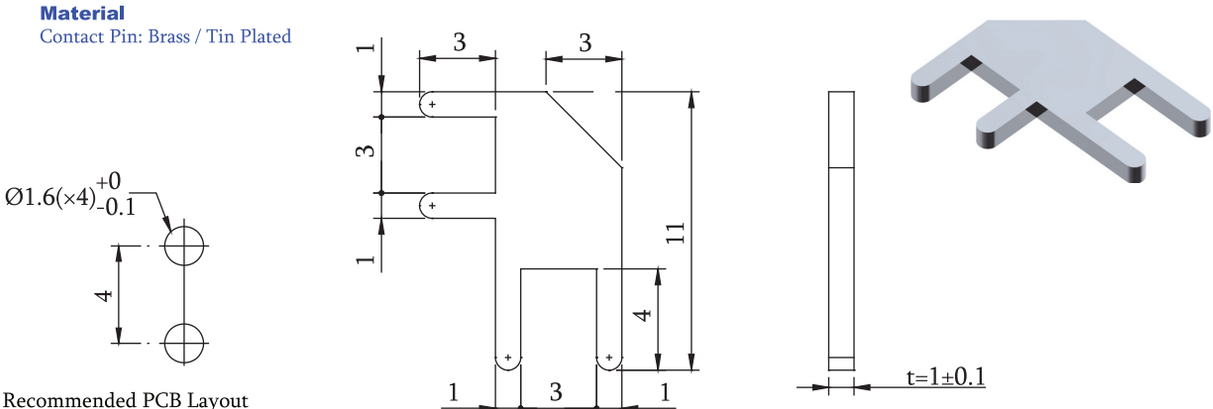

Recommended PCB Layout
(PCB TOLERANCE ±0.05)

P/N.:5GBR-005T0-A1

PCB Terminal Right Angle Type Flat Pin

Material
Contact Pin: Brass / Tin Plated

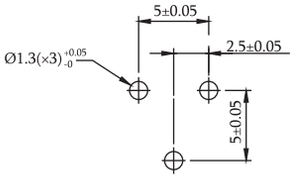

Recommended PCB Layout
(PCB TOLERANCE ±0.05)

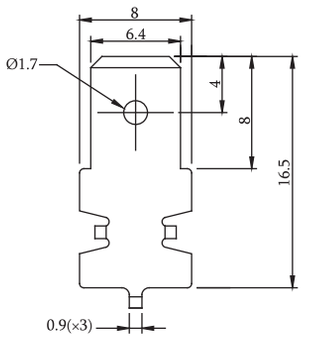

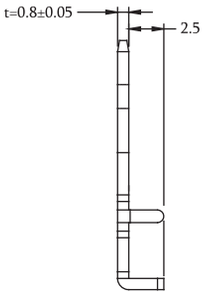

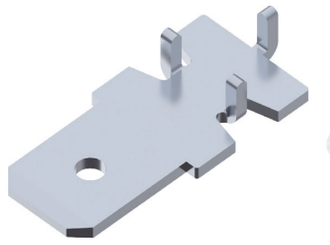

P/N.:5GBR-006T0-A1

Material
Contact Pin: Brass / Tin Plated

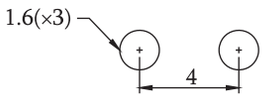

Recommended PCB Layout
(PCB TOLERANCE ±0.05)

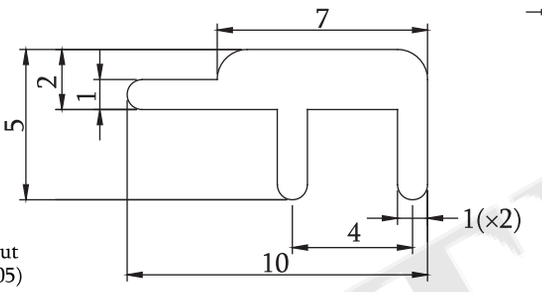

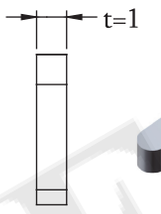

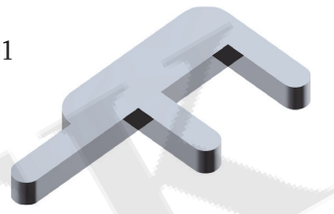

P/N.:5GBR-007T0-A1

Material
Contact Pin: Brass / Tin Plated

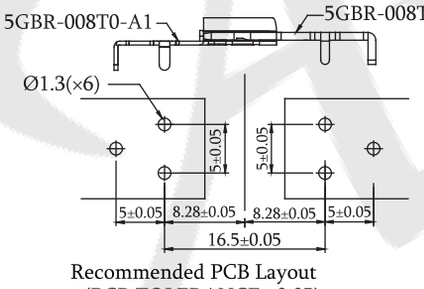

Recommended PCB Layout
(PCB TOLERANCE ±0.05)

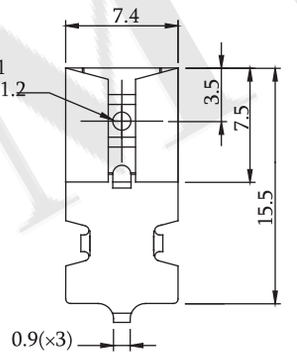

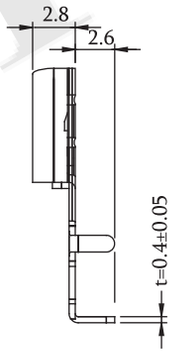

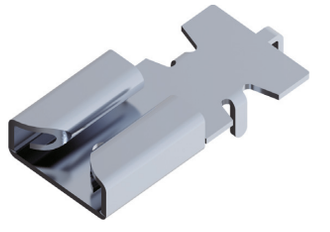

P/N.:5GBR-008T0-A1

Material
Contact Pin: Brass / Tin Plated

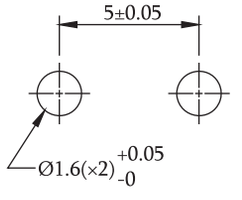

Recommended PCB Layout
(PCB TOLERANCE ±0.05)

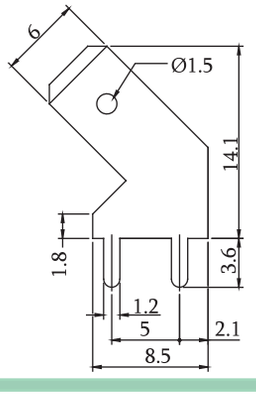

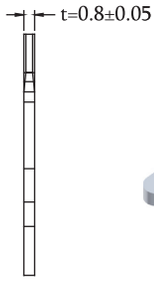

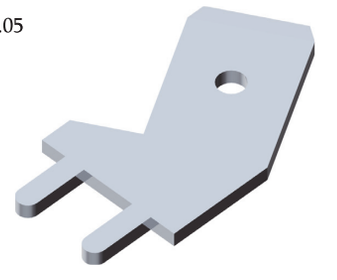

P/N.:5GBR-009T0-A1

Material
Contact Pin: Brass / Tin Plated

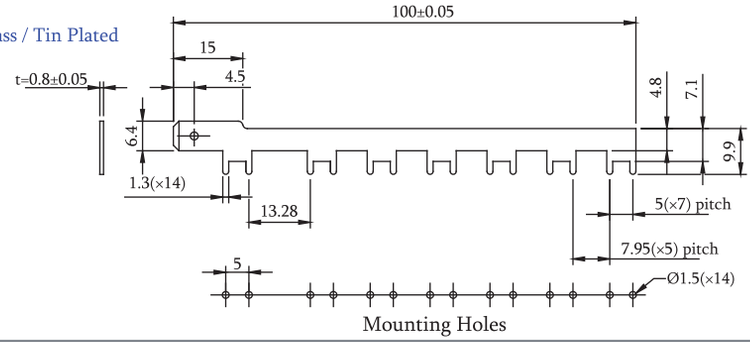

Mounting Holes

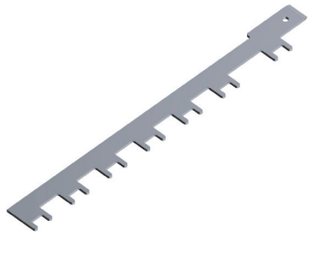

P/N.:5GBR-010T0-A1

PCB Terminal

Pb RoHS

PCB Terminal Straight Type Flat Pin

Material
Contact Pin: Brass / Nickel Plated

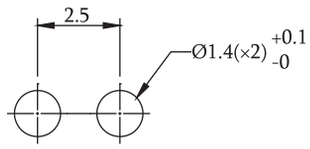

Recommended PCB Layout
(PCB TOLERANCE ±0.05)

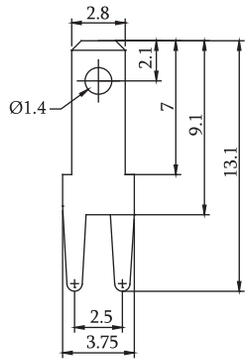

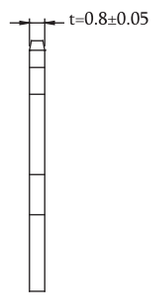

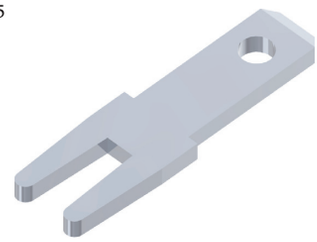

P/N.:5GBS-001NI-A1

Material
Contact Pin: Brass / Tin Plated

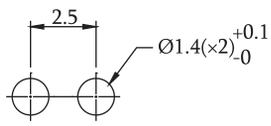

Recommended PCB Layout
(PCB TOLERANCE ±0.05)

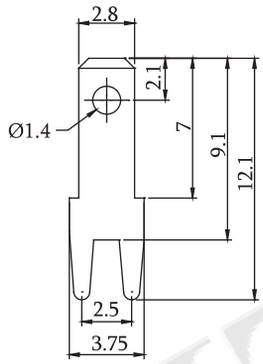

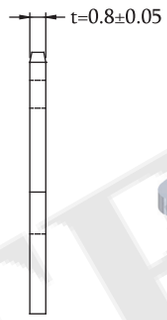

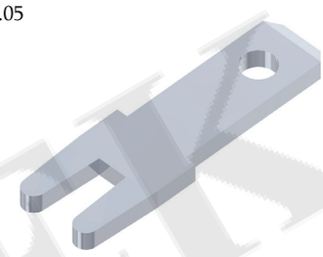

P/N.:5GBS-002T0-A1

Material
Contact Pin: Brass / Tin Plated

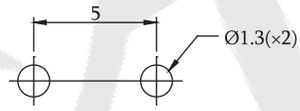

Recommended PCB Layout
(PCB TOLERANCE ±0.05)

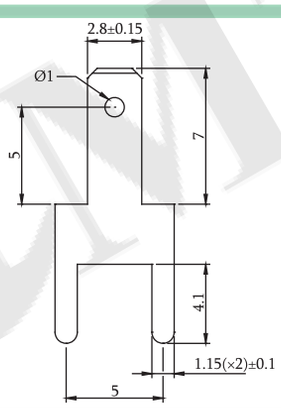

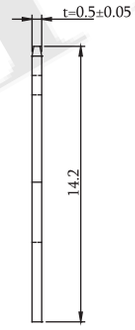

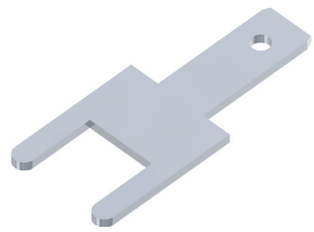

P/N.:5GBS-003T0-A1

Material
Contact Pin: Brass / Tin Plated

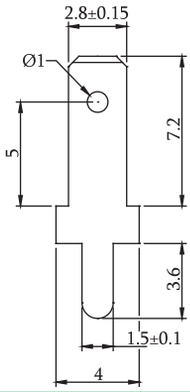

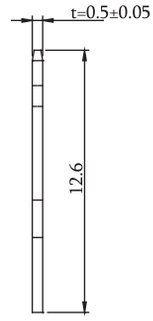

P/N.:5GBS-004T0-A1

Material
Contact Pin: Brass

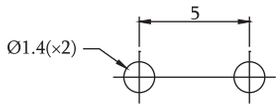

Recommended PCB Layout
(PCB TOLERANCE ±0.05)

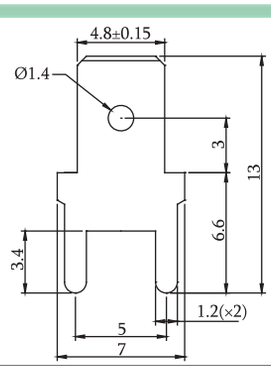

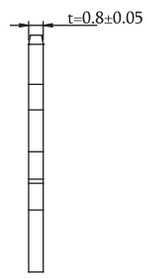

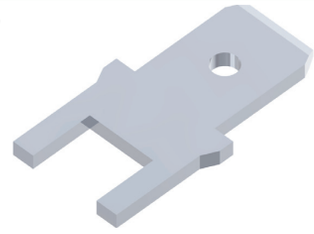

P/N.:5GBS-005XX-A1
T0:Tin Plated
TM: Matte Tin

PCB Terminal Straight Type Flat Pin

Material
Contact Pin: Brass / Tin Plated

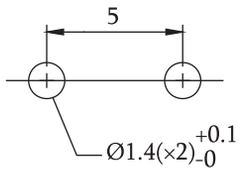

Recommended PCB Layout
(PCB TOLERANCE ±0.05)

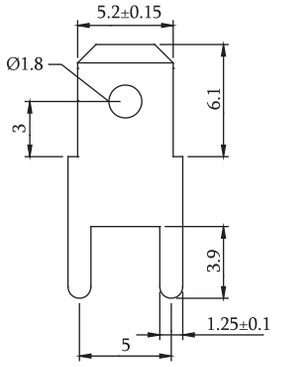

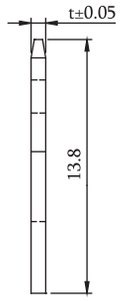

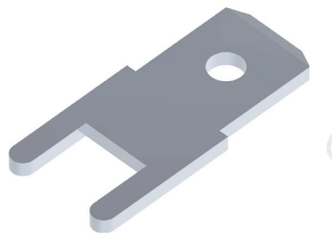

P/N.:5GBS-006T0-AX
1:t=0.8
2:t=0.5

Material
Contact Pin: Brass

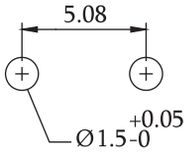

Recommended PCB Layout
(PCB TOLERANCE ±0.05)

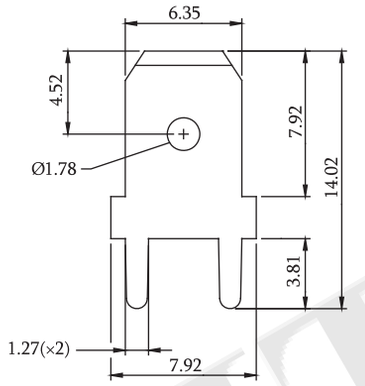

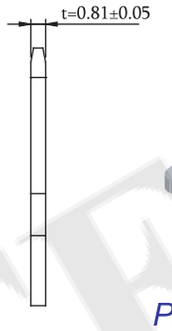

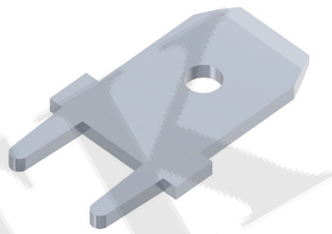

P/N.:5GBS-007XX-A1
T0: Tin Plated
TM: Matte Tin

Material
Contact Pin: Brass / Tin Plated

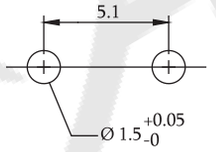

Recommended PCB Layout
(PCB TOLERANCE ±0.05)

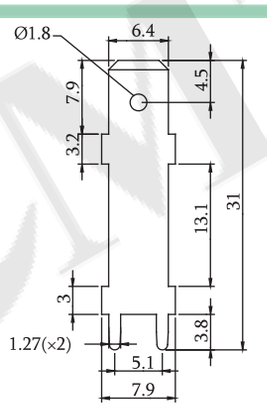

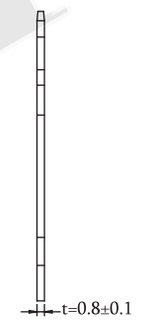

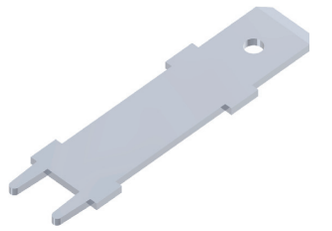

P/N.:5GBS-008T0-A1

Material
Contact Pin: Brass

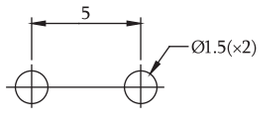

Recommended PCB Layout
(PCB TOLERANCE ±0.05)

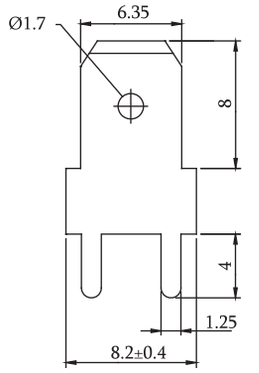

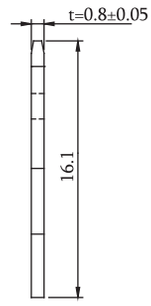

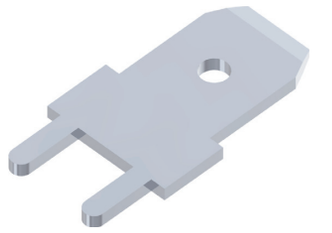

P/N.:5GBS-009XX-A1
T0: Tin Plated
TM: Matte Tin

Material
Contact Pin: Brass / Tin Plated

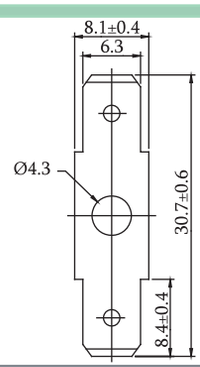

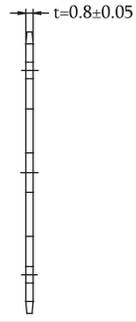

P/N.:5GBS-010T0-A1

PCB Terminal Straight Type Flat Pin

Material
Contact Pin: Brass / Tin Plated

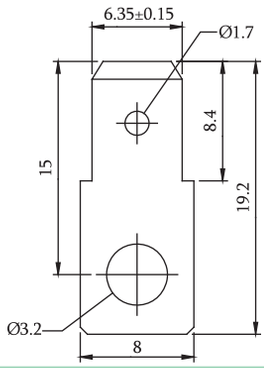

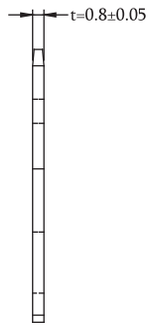

P/N.:5GBS-011T0-A1

Material
Contact Pin: Brass / Tin Plated

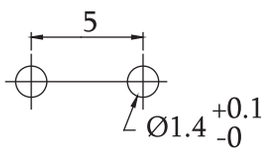

Recommended PCB Layout
(PCB TOLERANCE ±0.05)

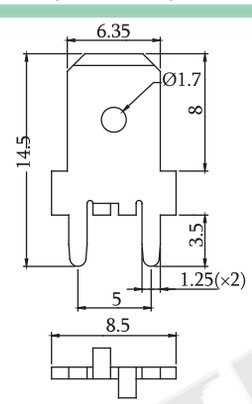

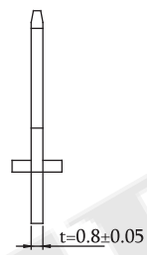

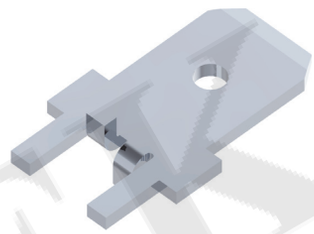

P/N.:5GBS-012T0-A1

Material
Contact Pin: Brass / Tin Plated

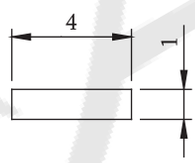

Recommended PCB Layout
(PCB TOLERANCE ±0.05)

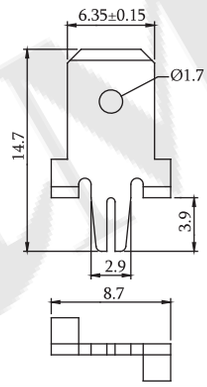

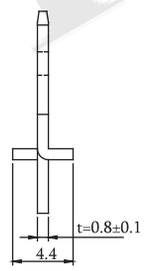

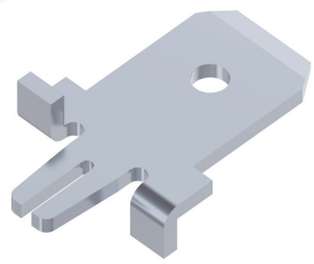

P/N.:5GBS-013T0-A1

Material
Contact Pin: Brass / Matte Tin Plated

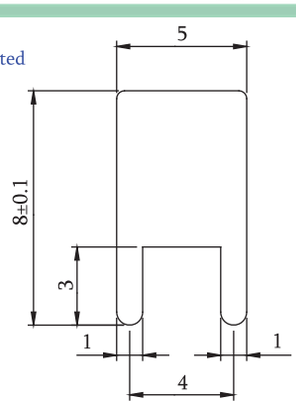

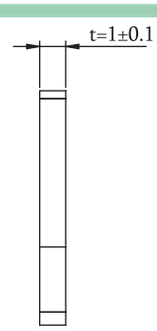

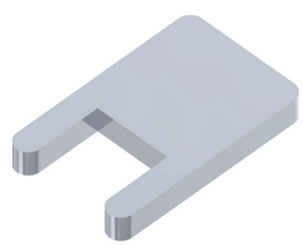

P/N.:5GBS-014TM-A1

Material
Contact Pin: Brass / Tin Plated

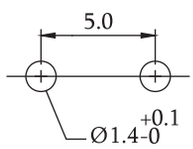

Recommended PCB Layout
(PCB TOLERANCE ±0.05)

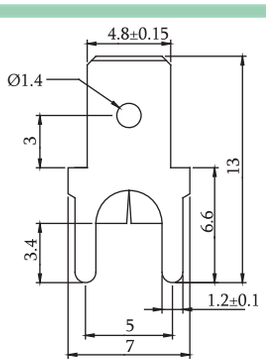

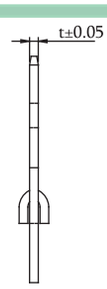

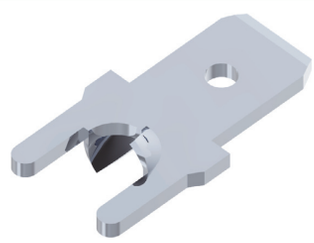

P/N.:5GBS-015T0-AX
1:t=0.8
2:t=0.5

PCB Terminal Straight Type Flat Pin

Material
Contact Pin: Brass / Tin Plated

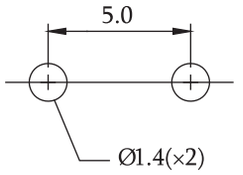

Recommended PCB Layout
(PCB TOLERANCE ±0.05)

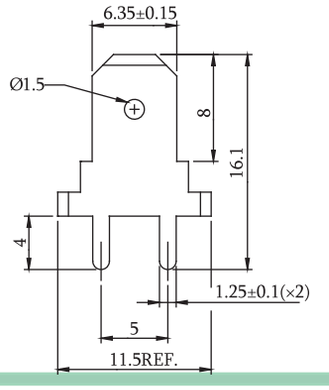

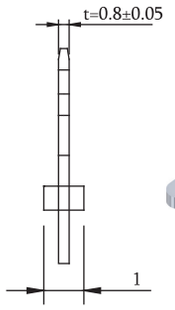

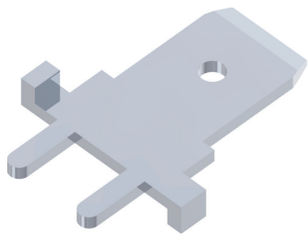

P/N.:5GBS-016T0-A1

Material
Contact Pin: Brass / Tin Plated

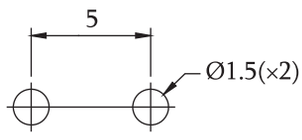

Recommended PCB Layout
(PCB TOLERANCE ±0.05)

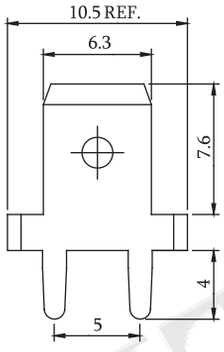

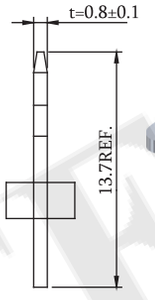

P/N.:5GBS-017T0-A1

Material
Contact Pin: Brass / Tin Plated

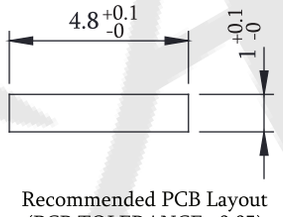

Recommended PCB Layout
(PCB TOLERANCE ±0.05)

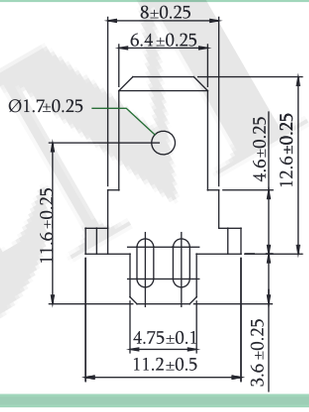

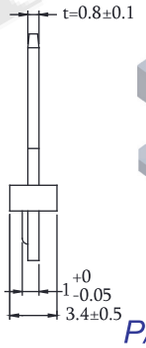

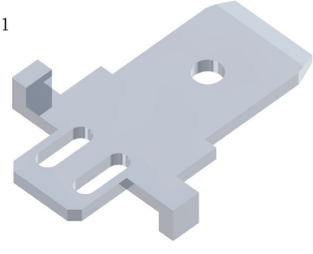

P/N.:5GBS-018TM-A1

Material
Contact Pin: Brass / Tin Plated

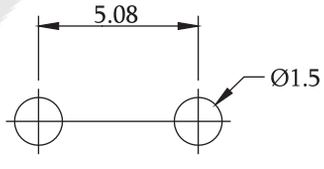

Recommended PCB Layout
(PCB TOLERANCE ±0.05)

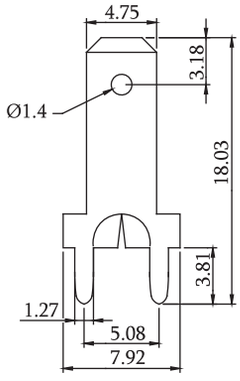

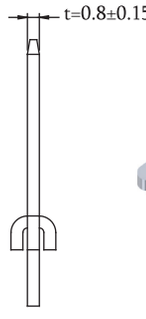

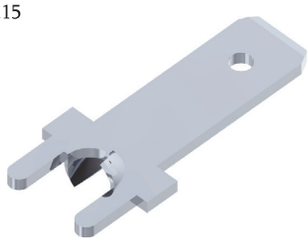

P/N.:5GBS-019T0-A1

Material
Contact Pin: Brass / Tin Plated

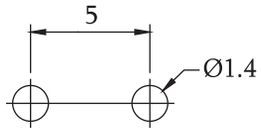

Recommended PCB Layout
(PCB TOLERANCE ±0.05)

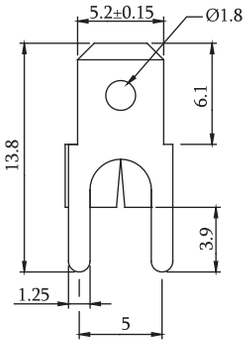

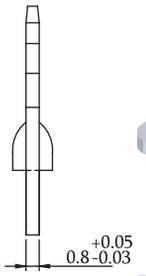

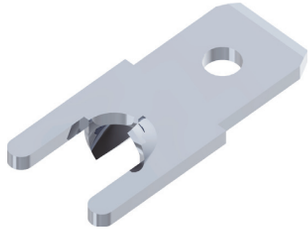

P/N.:5GBS-020T0-A1

PCB Terminal Straight Type Flat Pin

Material
Contact Pin: Brass / Tin Plated

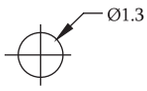

Recommended PCB Layout
(PCB TOLERANCE ±0.05)

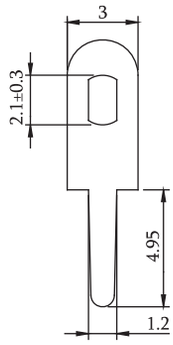

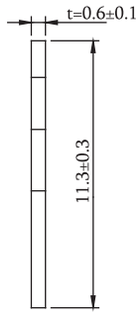

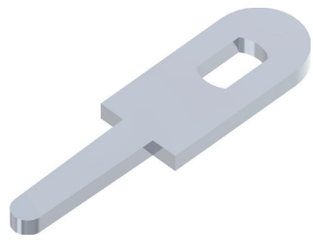

P/N.:5GBS-021T0-A1

Material
Contact Pin: Brass / Tin Plated

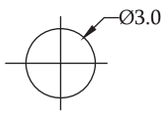

Recommended PCB Layout
(PCB TOLERANCE ±0.05)

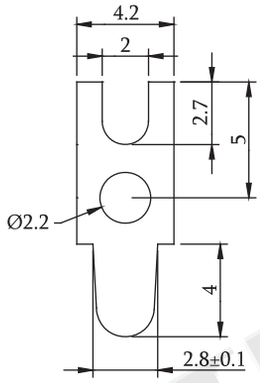

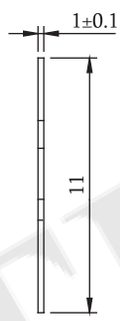

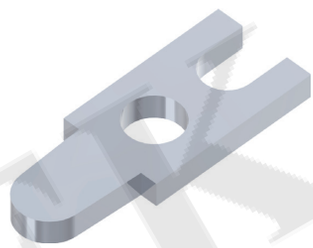

P/N.:5GBS-022T0-A1

Material
Contact Pin: Brass / Tin Plated

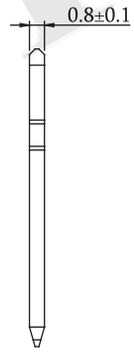

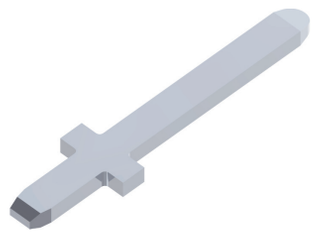

P/N.:5GBS-023T0-A1

Material
Contact Pin: Brass / Tin Plated

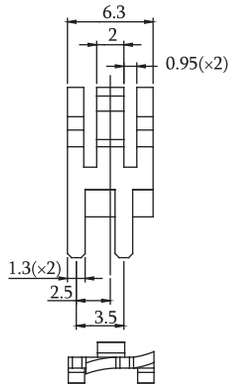

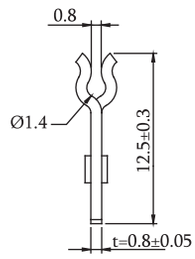

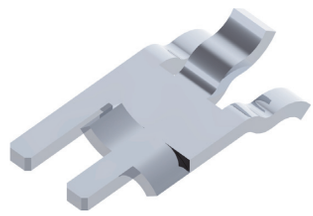

P/N.:5GBS-024T0-A1

Material
Contact Pin: Brass / Tin Plated

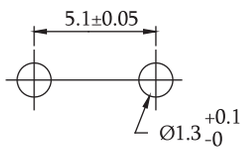

Recommended PCB Layout
(PCB TOLERANCE ±0.05)

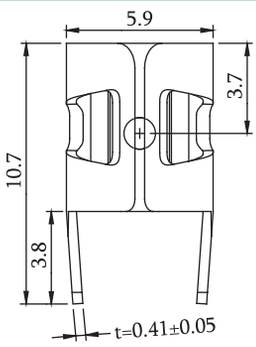

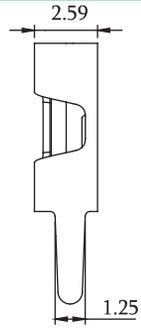

P/N.:5GBS-025T0-A1

PCB Terminal Straight Type Flat Pin

Material
Contact Pin: Brass / Tin Plated

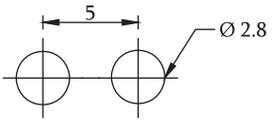

Recommended PCB Layout
(PCB TOLERANCE ±0.05)

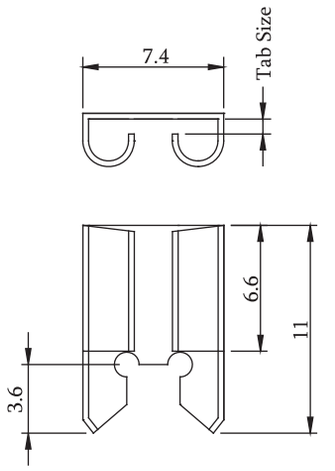

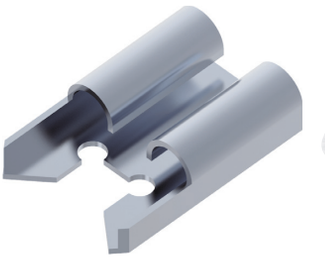

P/N.:5GBT-001XX-AX

T0: Tin Plated
NI: Nickel Plated
1:Tab Size=0.5×6.35
2:Tab Size=0.8×6.35

Material
Contact Pin: Brass / Tin Plated

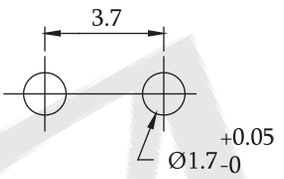

Recommended PCB Layout
(PCB TOLERANCE ±0.05)

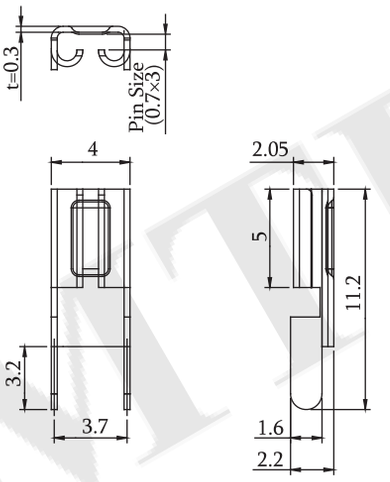

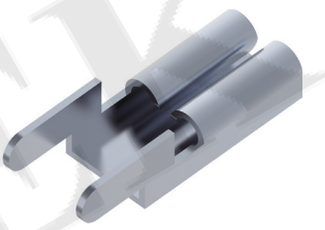

P/N.:5GBT-002T0-A1

Material
Contact Pin: Brass / Tin Plated

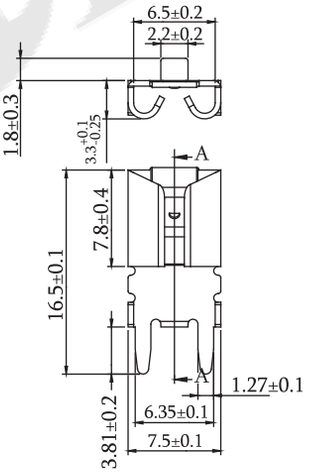

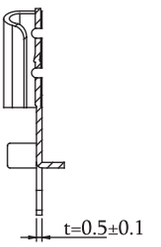

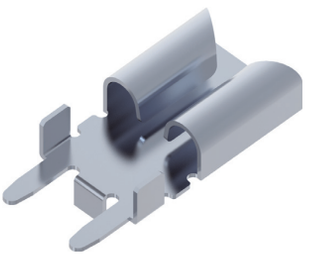

P/N.:5GBT-004T0-A1

Material
Contact Pin: Brass / Tin Plated

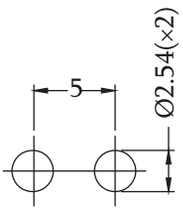

Recommended PCB Layout
(PCB TOLERANCE ±0.05)

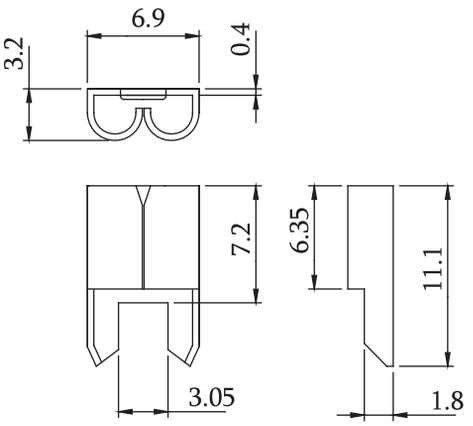

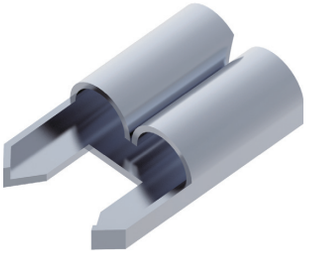

P/N.:5GBT-005T0-A1

PCB Terminal V Type Flat Pin

Material
Contact Pin: Brass / Tin Plated

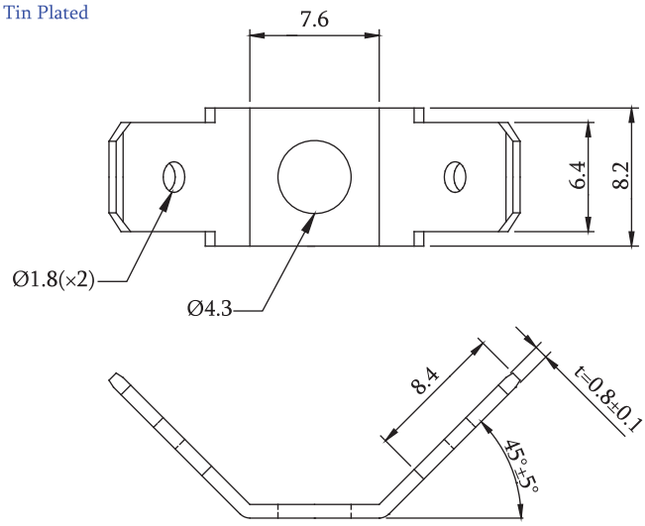

P/N.:5GBV-001T0-A1

Material
Contact Pin: Brass / Tin Plated

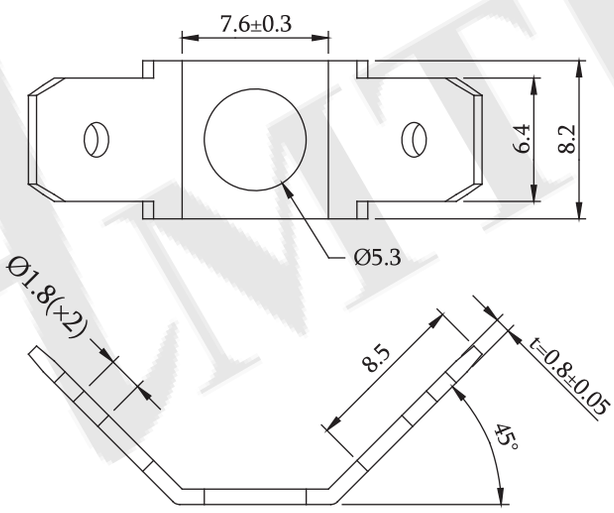

Tab Size: 0.8×6.35

P/N.:5GBV-002T0-A1

PCB Terminal Z Type Flat Pin

Material
Contact Pin: Brass / Tin Plated

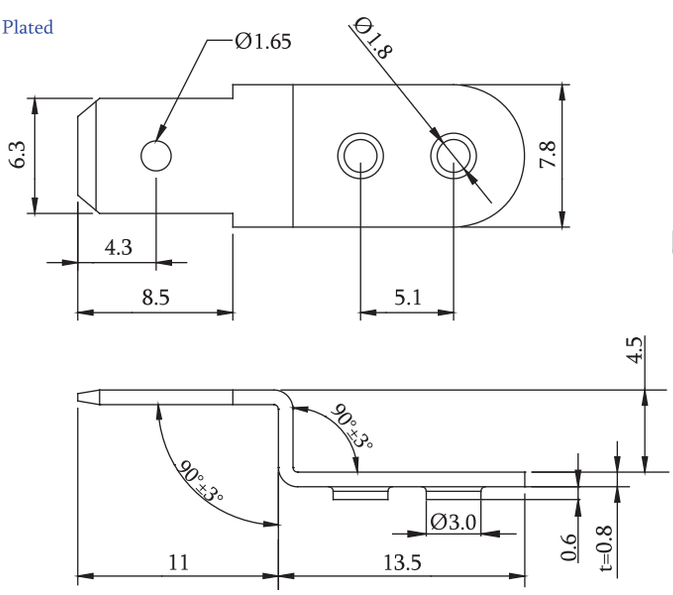

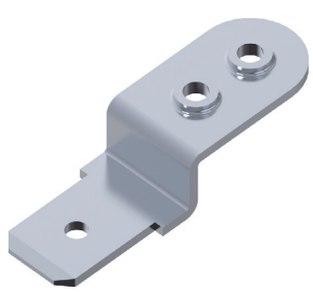

P/N.:5GBZ-001T0-A1

PCB Terminal Turning Pin Type

Material
Contact Pin: Brass / Tin Plated

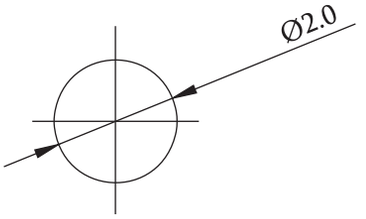

Recommended PCB Layout
(PCB TOLERANCE ±0.05)

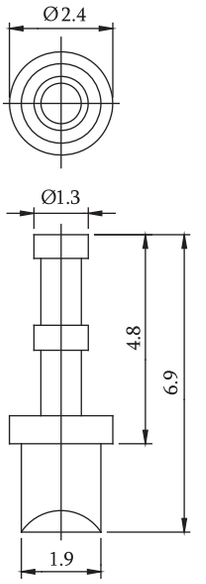

P/N.:5GTC-001NI-A1

Material
Contact Pin: Brass / Tin Plated

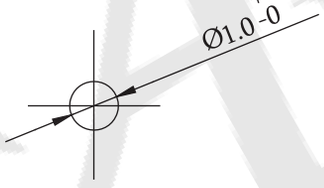

Recommended PCB Layout
(PCB TOLERANCE ±0.05)

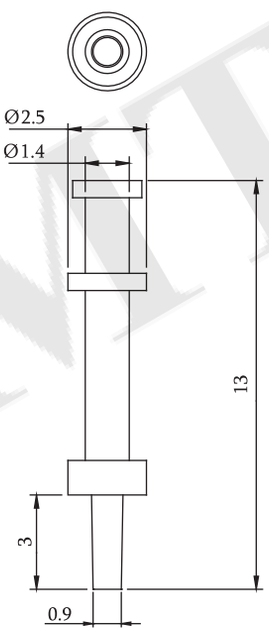

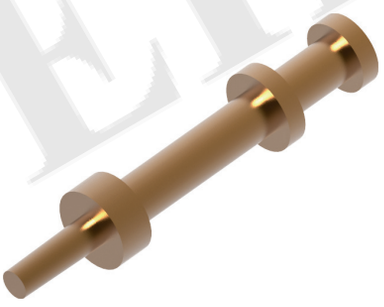

P/N.:5GTC-002G0-A1

Material
Contact Pin: Brass / Tin Plated

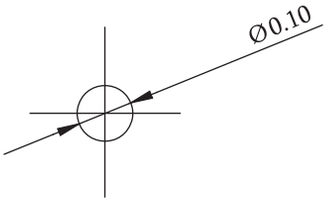

Recommended PCB Layout
(PCB TOLERANCE ±0.05)

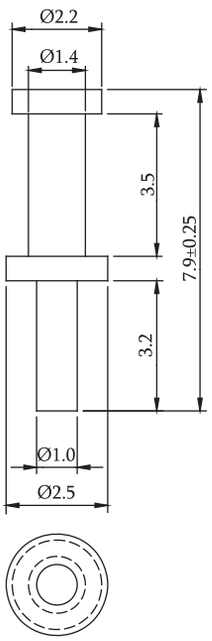

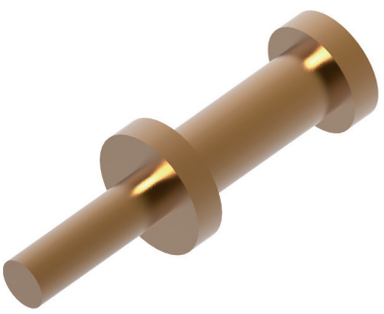

P/N.:5GTC-003G0-A1

PCB Terminal Turning Pin Type

Material
Contact Pin: Brass / Tin Plated

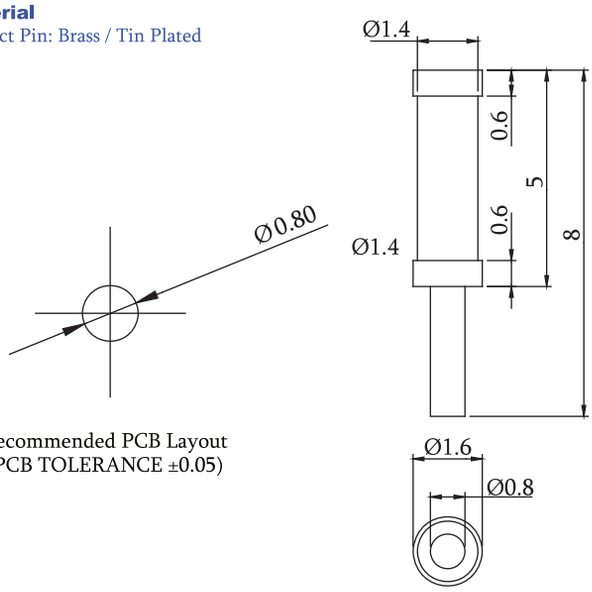

Recommended PCB Layout
(PCB TOLERANCE ±0.05)

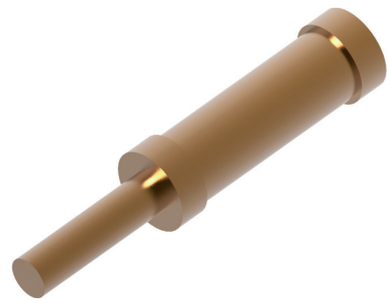

P/N.:5GTC-004G0-A1

Material
Contact Pin: Brass / Tin Plated

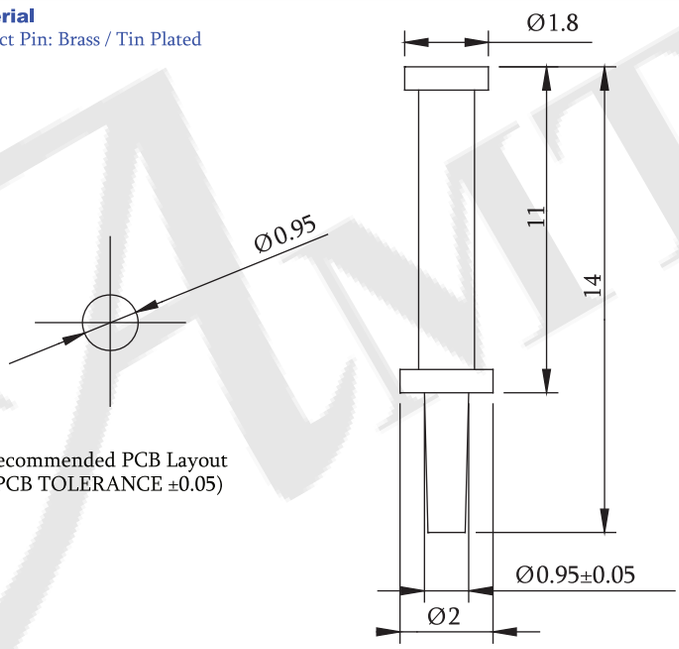

Recommended PCB Layout
(PCB TOLERANCE ±0.05)

P/N.5GTC-005G0-A1

Material
Contact Pin: Brass / Tin Plated

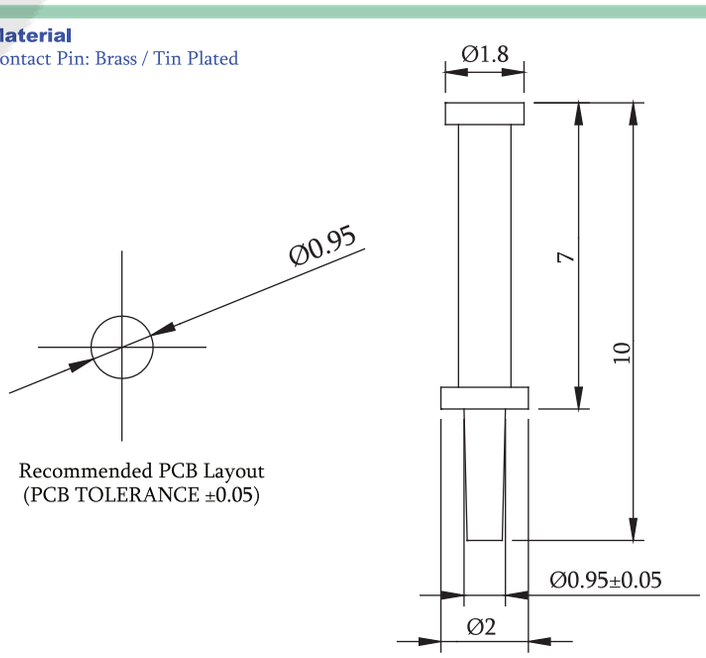

Recommended PCB Layout
(PCB TOLERANCE ±0.05)

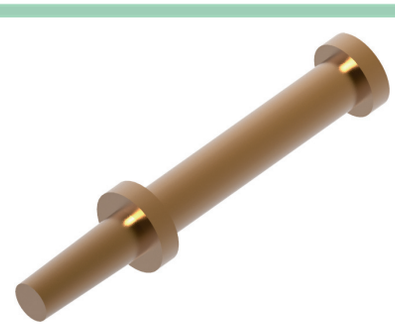

P/N.:5GTC-006G0-A1

PCB Terminal Testing Pin Type

Material
Contact Pin: Phosphor Bronze / Gold Plated

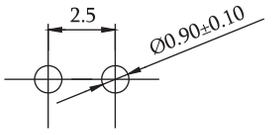

Recommended PCB Layout
(PCB TOLERANCE ±0.05)

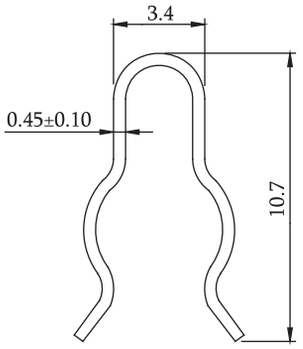

P/N.:5GTK-001G0-A1

Material
Contact Pin: Phosphor Bronze / Gold Plated

Part No.	Color
1	W/O Plastic
2	Blue
3	Red
4	Green
5	Black
6	White
7	Yellow

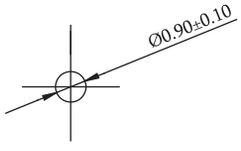

Recommended PCB Layout
(PCB TOLERANCE ±0.05)

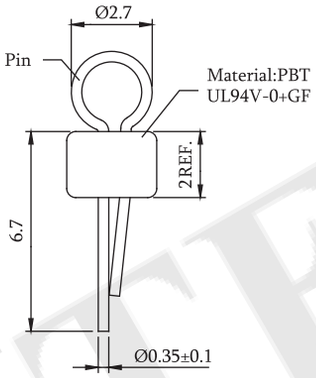

P/N.:5GTK-002G0-AX
See Table

Material
Contact Pin: Phosphor Bronze / Gold Plated

Part No.	Color
1	Orange
2	Blue
3	Red
4	Green
5	Black
6	White
7	Yellow

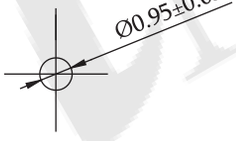

Recommended PCB Layout
(PCB TOLERANCE ±0.05)

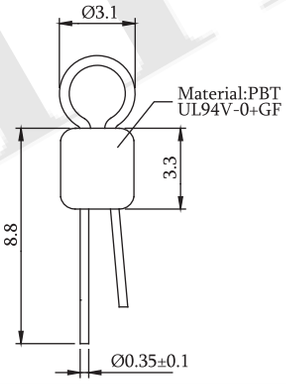

P/N.:5GTK-003G0-AX
See Table

Material
Contact Pin: Phosphor Bronze / Tin Plated

Part No.	Color
1	Natural
2	Blue
3	Red
4	Green
5	Black
6	White
7	Yellow

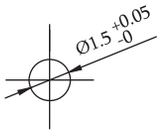

Recommended PCB Layout
(PCB TOLERANCE ±0.05)

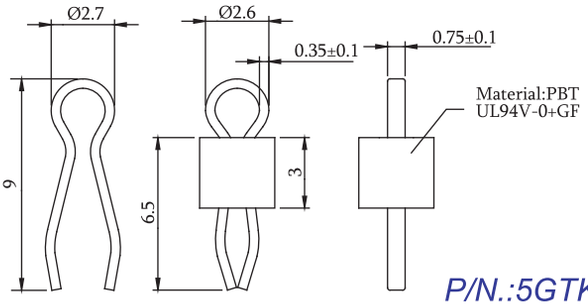

P/N.:5GTK-004T0-AX
See Table

Material
Contact Pin: Brass / Tin Plated

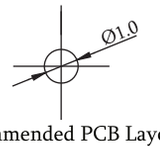

Recommended PCB Layout
(PCB TOLERANCE ±0.05)

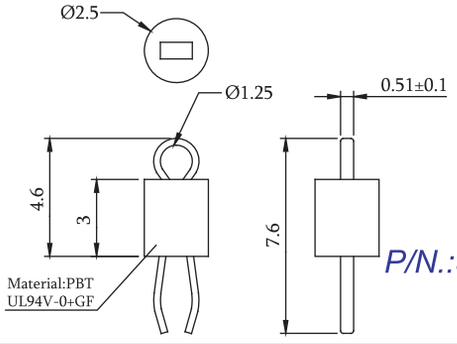

P/N.:5GTK-005T0-AX
1:Color=Black
2.Color=White