SFP+ Connectors

8-55~8-66 • SFP+ Connectors

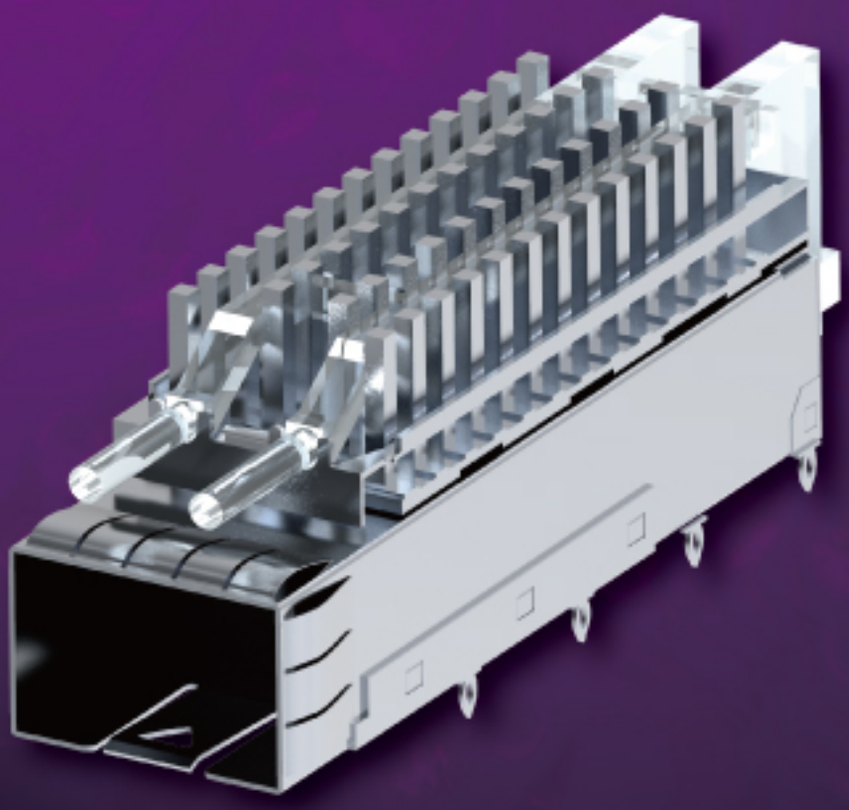

AMTEK Technology Co., Ltd

SFP+ 1×1 Connector

Specifications
Contact Rating: 0.5A
Contact Resistance: 20mΩ Max.
Dielectric Voltage: 300V for one minute
Operation Temperature: -40°C to +85°C
Durability: 100 Cycle Min

Material
Insulator: LCP, UL94V-0, Black
Contact Pin: Copper Alloy

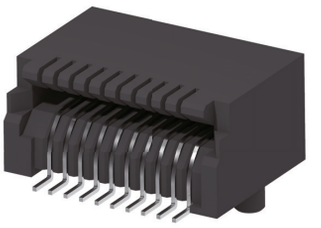

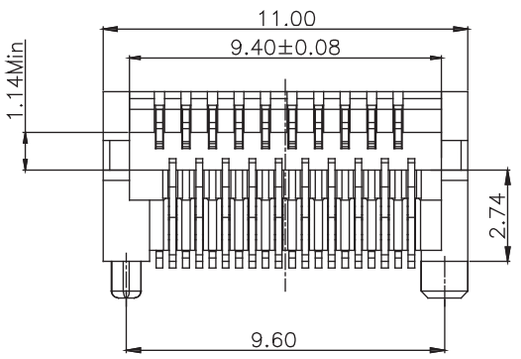

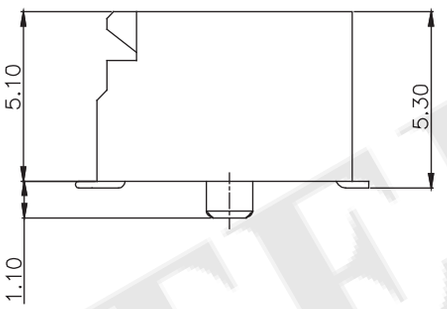

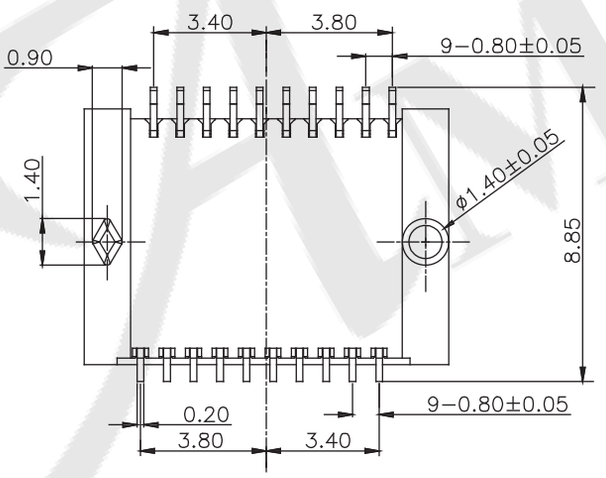

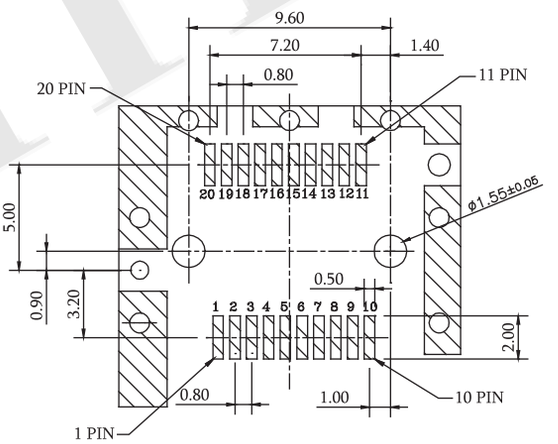

Recommended PCB Layout
(PCB TOLERANCE ±0.05)

ORDER INFORMATION

5 H S P 2 0 1 - S F N H - 0 1

SF:Selective 15u"

H:Tape & Reel, W/O Cap

SFP+ 1×1 Cage Solder

Specifications
Operation Temperature: -40°C to +85°C

Material
SFP Cage: Copper Alloy
EMI Spring: Copper Alloy

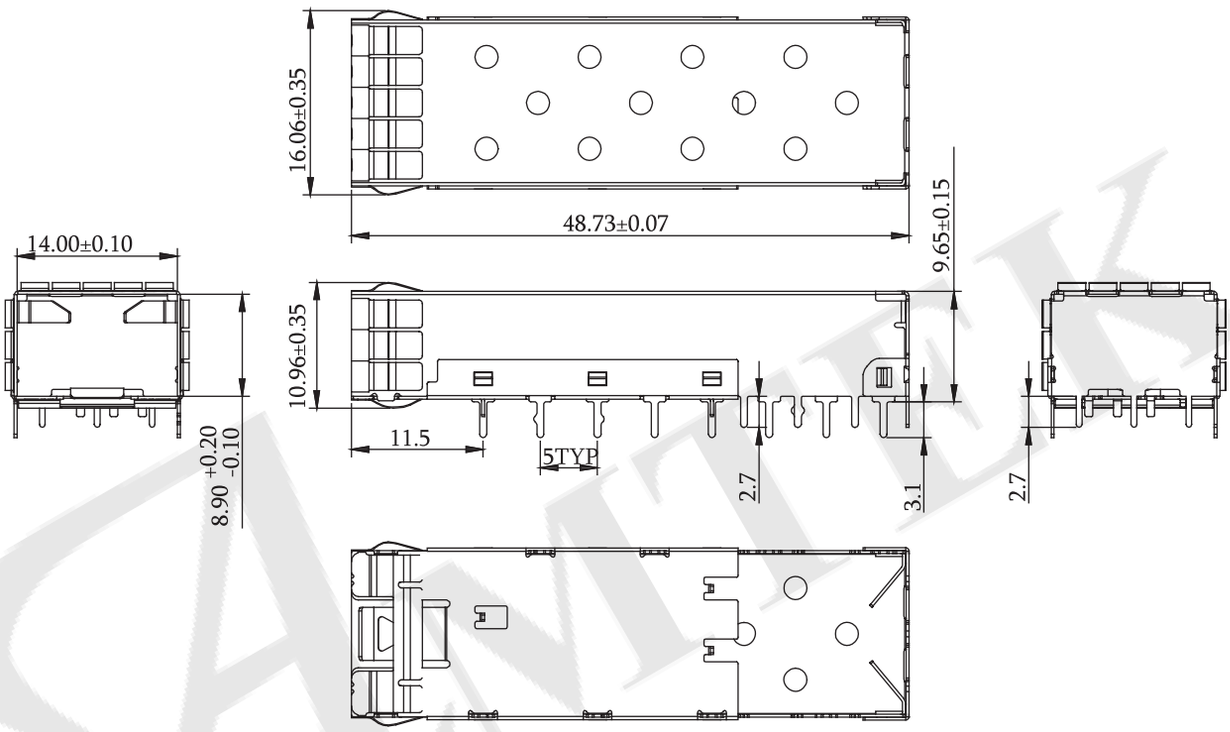

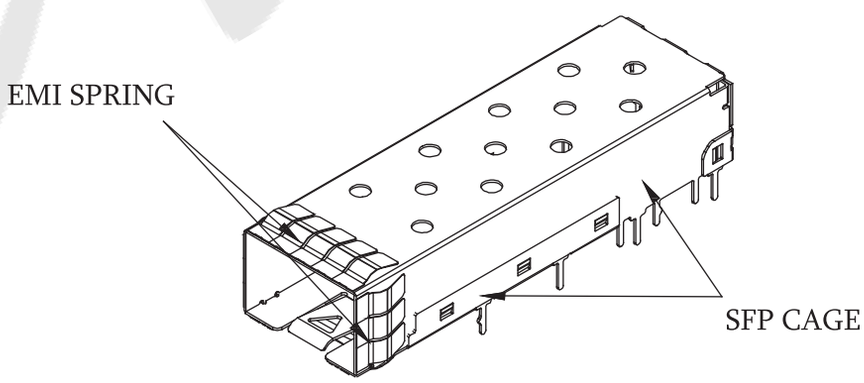

ORDER INFORMATION

5 H S P C 0 2 - 1 1 N M N N I X - 0 1

- 1 1 → 1×1 Port
- M → M: Metal EMI
- I → NI: Nickel Plating
- X → X: Box

AMTEK

SFP+ 1×1 Cage Press Fit With Heat Sink

Specifications
Operation Temperature: -40°C to +85°C

Material
SFP Cage: Copper Alloy
EMI Spring: Copper Alloy
Heat Sink: Aluminum
Heat Sink Clip: Stainless Steel
Lighte Pipe: PC Color: Clear

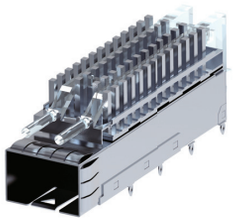

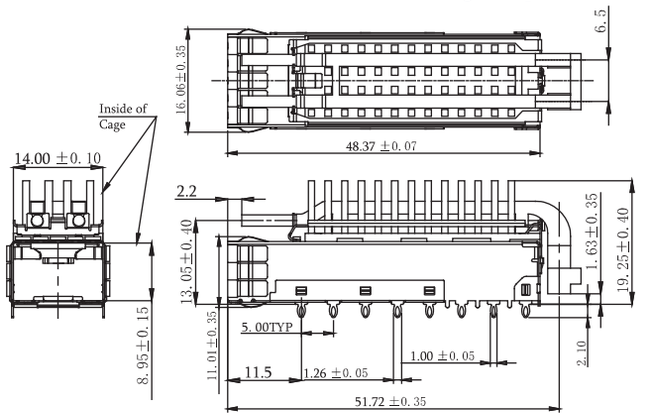

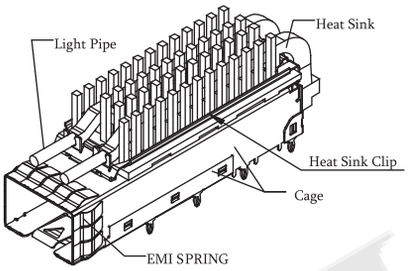

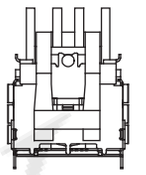

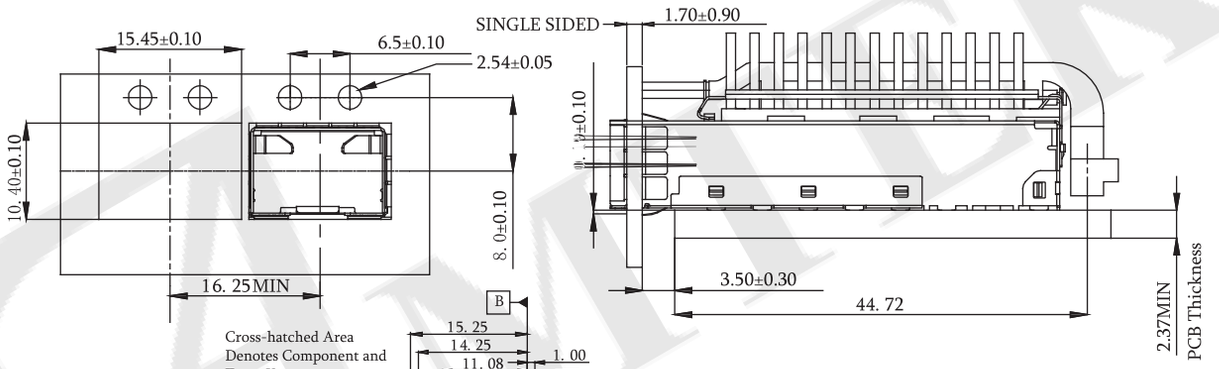

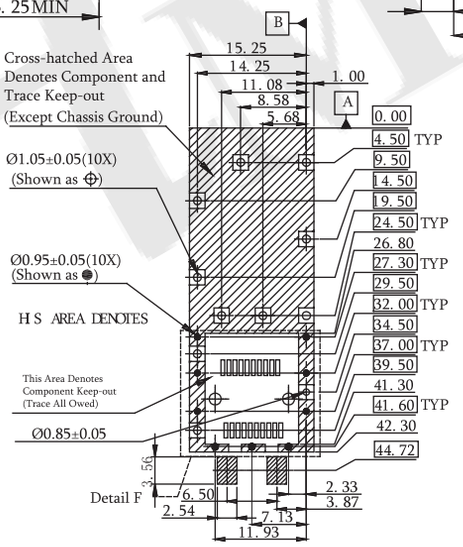

Recommended PCB Layout
(PCB TOLERANCE ±0.05)

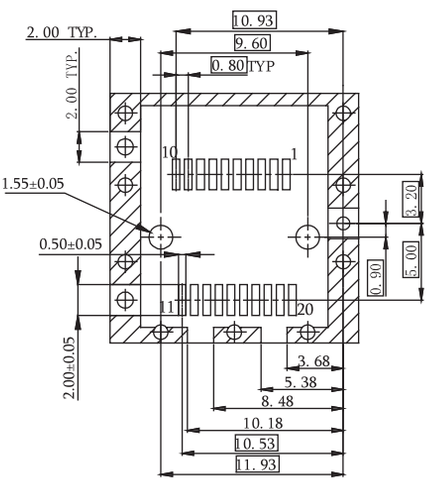

Detail F

ORDER INFORMATION

5 H S P C 0 2 - 1 1 1 M P N I X - 0 2

- 1 1 1 → 1×1 Port
- M → M: Metal EMI
- P → P: Pin Type
- N I → NI: Nickel Plating
- X → X: Box

S FP+ Series

Pb RoHS

SFP+ 1×4 Cage

Specifications
Operation Temperature: -40°C to +85°C

Material
Cage: 1PCS,Copper Alloy T=0.25, N/A
EMI Spring: 4PCS,Copper Alloy T=0.08, Ni For All
Heat sink: 4PCS, AL, Plating Ni 40 to 80μ"
Heat sink clip: 4PCS, SUS301½H,T=0.25, N/A

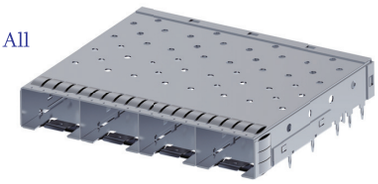

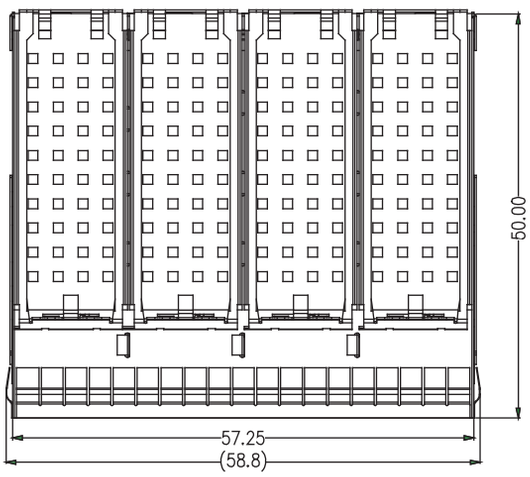

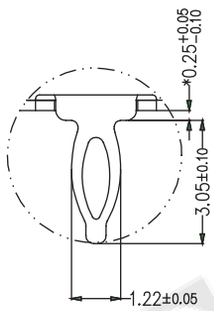

DETAIL "A"

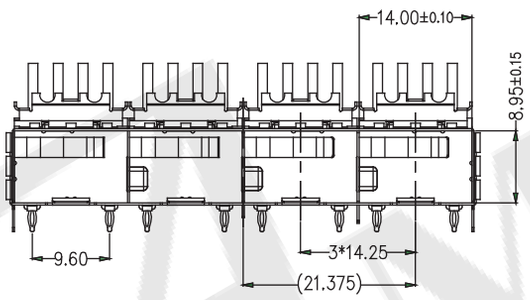

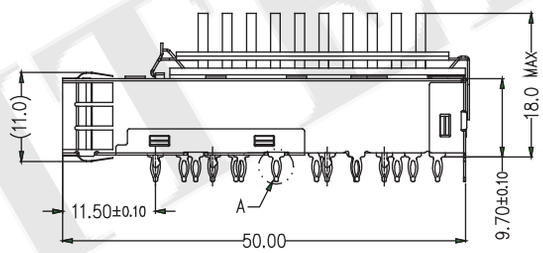

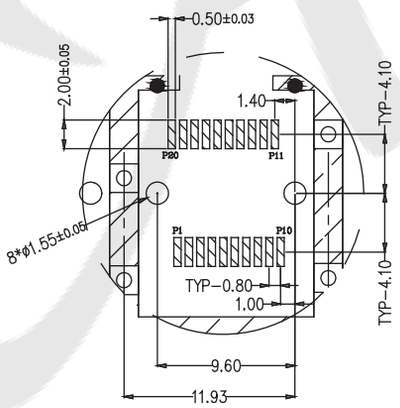

DETAIL "A"

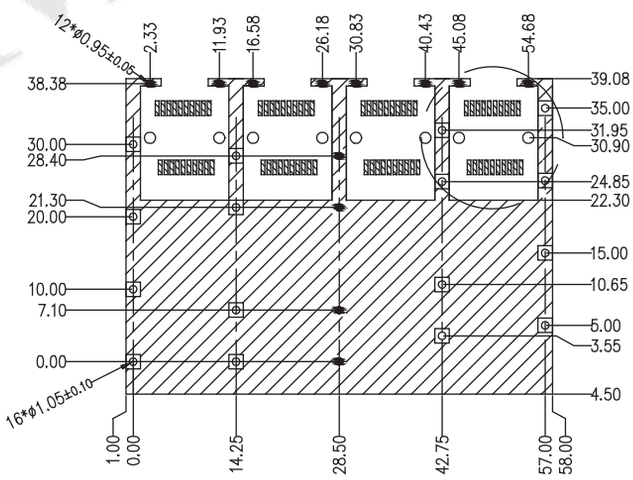

ORDER INFORMATION

5 H S P C 0 2 - 1 4 N M P N I X - 0 2

- 14: 1×4 Ports
- M: Metal EMI
- P: Pin Type
- NI: Nickel Plating
- X: Box

SFP+ 1×6 Cage Standard Layout

Specifications
Operation Temperature: -40°C to +85°C

Material
Cage: Copper Alloy
EMI Spring: Copper Alloy

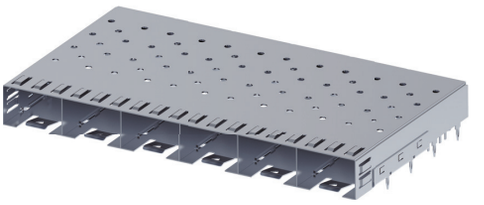

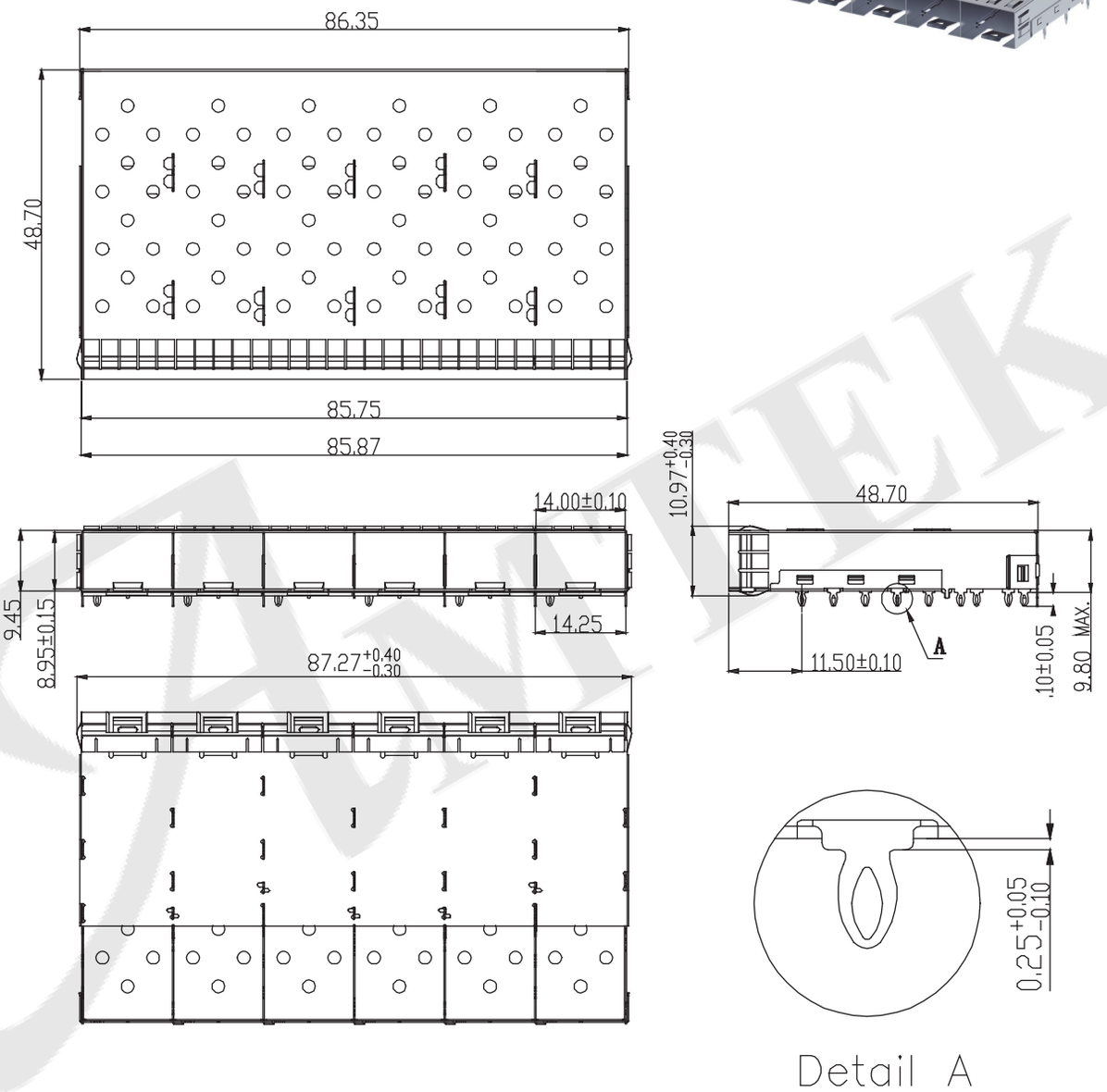

ORDER INFORMATION

5 H S P C 0 2 - 1 6 N M N N I X - 0 1

- 1 6: 1×6 Ports
- M: M: Metal EMI
- N I: NI: Nickel Plating
- X: X: Box

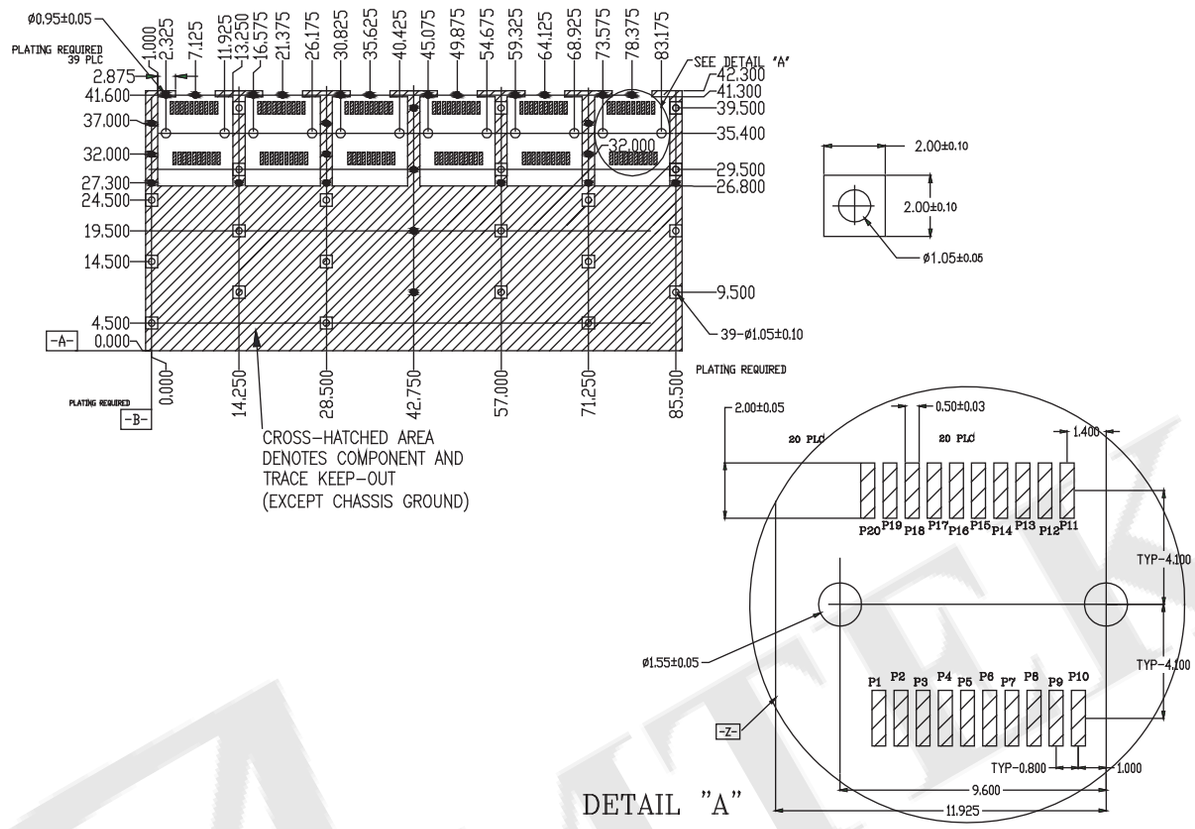

DETAIL "A"

RECOMMENDED PCB CONFIGURATION WITH KEEP-OUT AREAS
SINGLE SIDED APPLICATONS

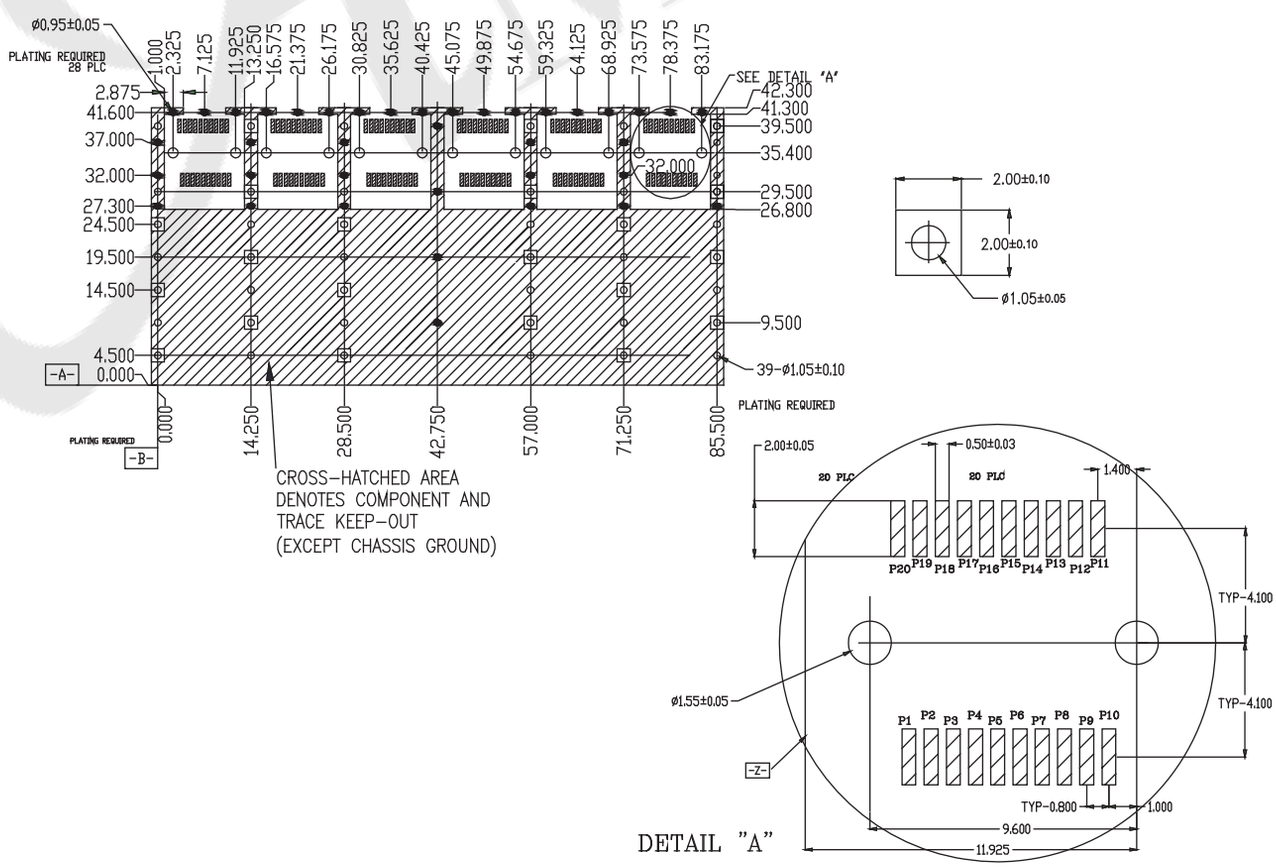

DETAIL "A"

RECOMMENDED PCB CONFIGURATION WITH KEEP-OUT AREAS
BFLLY TO BFLLY APPLICATONS

SFP+ 2×1 With Light Pipe

Specifications
Ratings Current: 0.5AMPS Max
Withstanding Voltage: 300V AC/Max
Ratings Voltage: 30 volt AC
Operation Temperature: -40°C to +85°C
Insulation Resistance: 1000MΩ Min

Material
Insulator: LCP, UL94V-0, Black
Contact Pin: Phosphor Bronze
Cage: Copper Alloy
Light Pipes: Polycarbonate, UL 94V-0,Clear
Light Pipe Housing: PBT UL 94V-0,Black

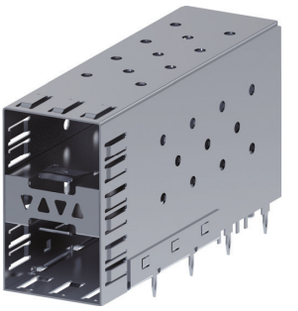

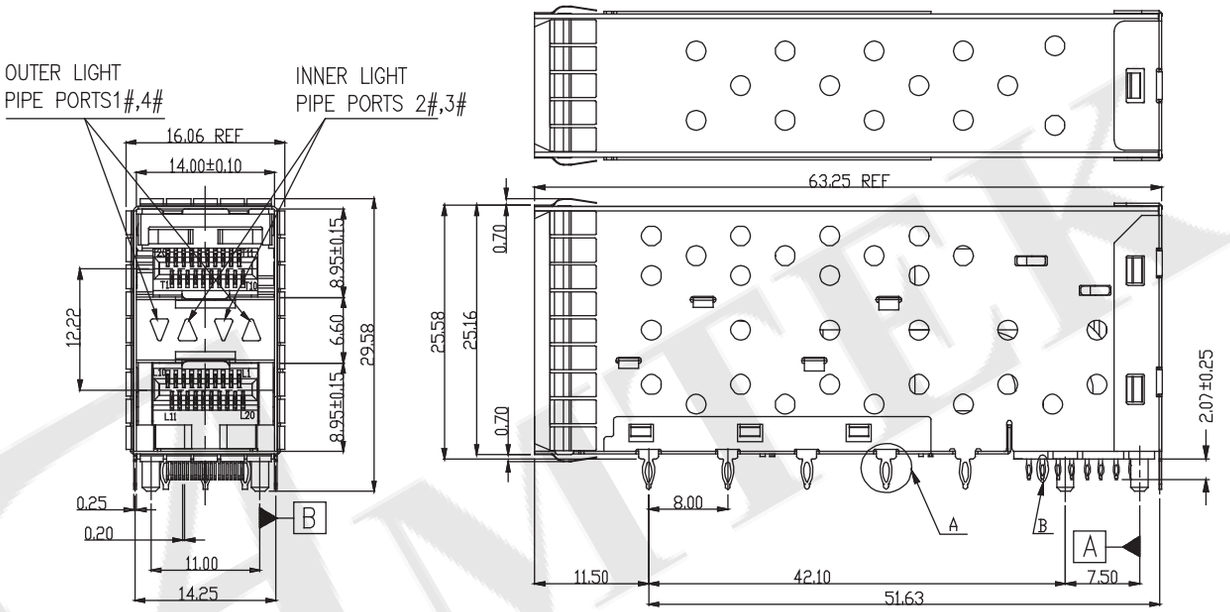

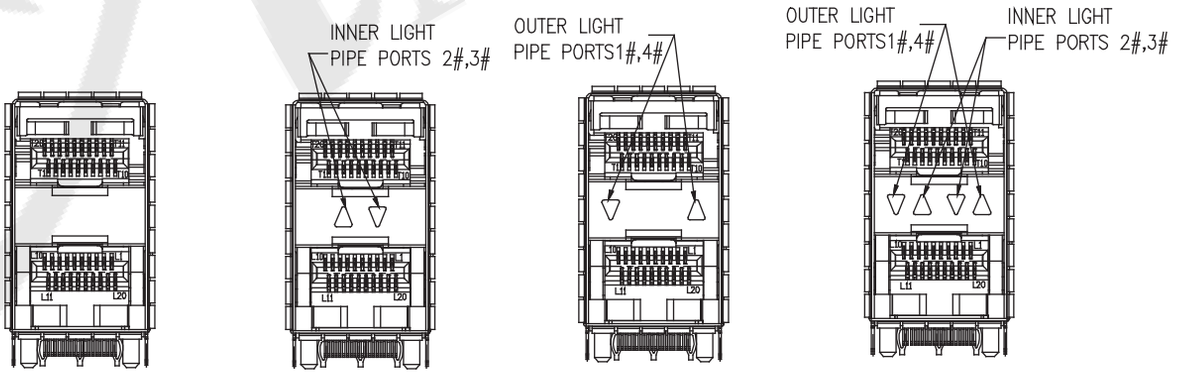

N:W/O Light Pipe | 2:Inner | 3:Outer | 4:Inner+Outer

ORDER INFORMATION

5 H S P 2 0 2 - 2 1 X M P X X X - 0 1

- 2 1 → 2×1 Port
- X → N:W/O Light Pipe; 2:Inner Light Pipe; 3:Outer Light Pipe; 4:Inner+Outer Light Pipe
- M → M: Metal EMI
- P → P: Pin Type
- X X → SF: Selective 15u"; SD: Selective 30u"; SH: Selective 50u"
- X → X: Box

S FP+ Series

Pb RoHS

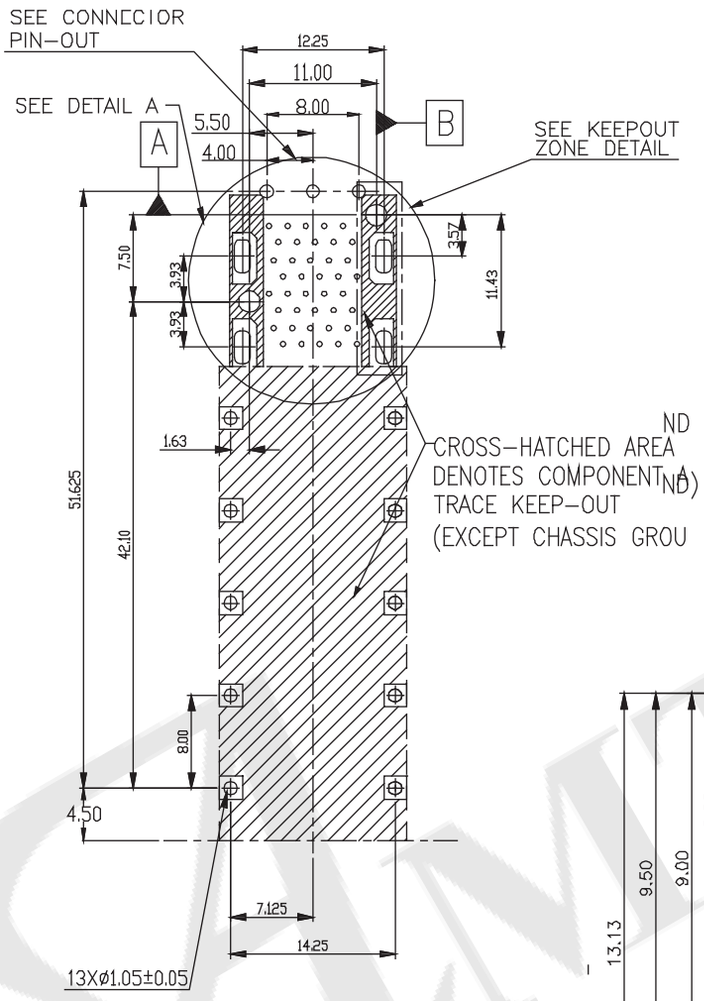

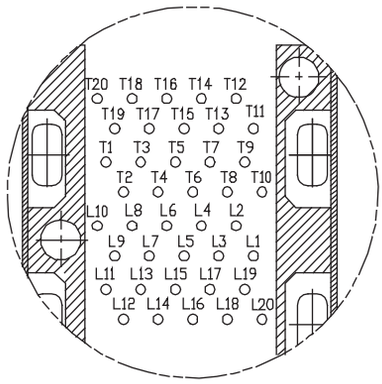

CONNECTOR PIN-OUT
COMPONENT SIDE OF BOARD

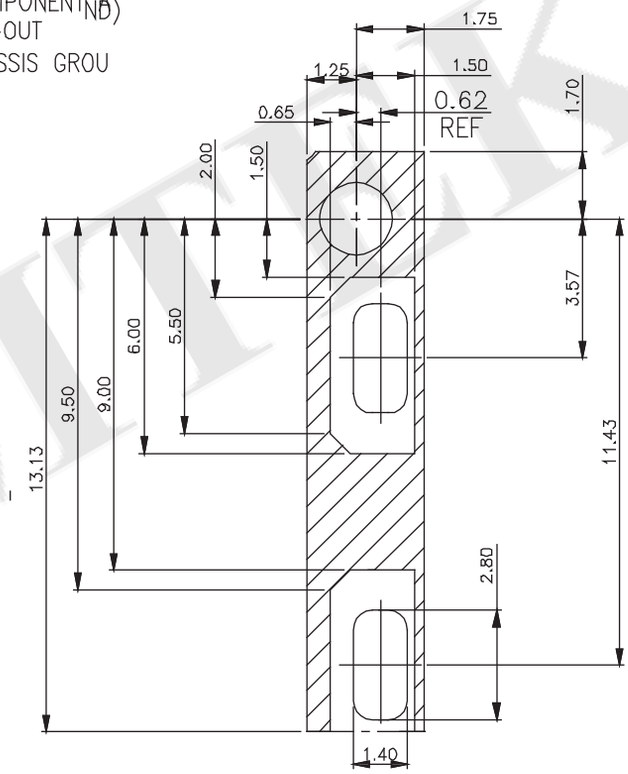

KEEPOUT ZONE DETAIL

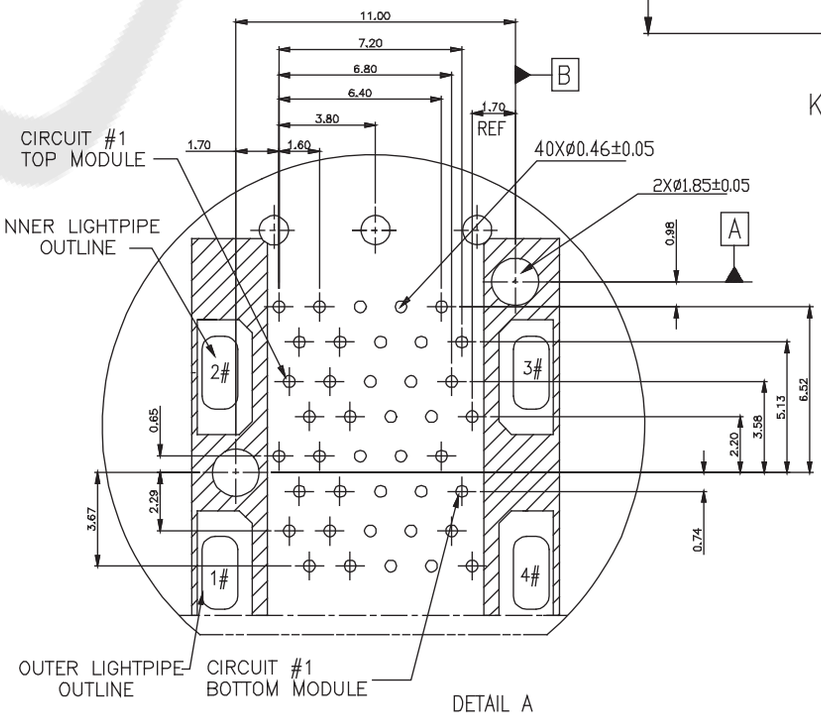

DETAIL A

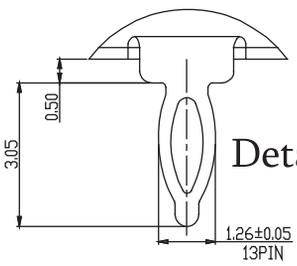

Detail A

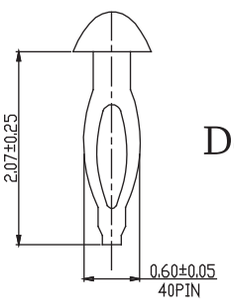

Detail B

SFP+ 2×4 Connector

Specifications
Current Ratings: 0.5 AMPS MAX
Voltage Ratings: 30 volt DC/AC(RMS) Max
Withstanding Voltage: 300V AC/Max
Operation Temperature: -40°C to +85°C
Insulation Resistance: 1000MΩ Min

Material
Insulator: LCP, UL94V-0, Black
Contact Pin: Phosphor Bronze
Cage: Copper Alloy
Light Pipes: Polycarbonate, UL 94V-0,Clear
Light Pipe Housing: PBT UL 94V-0,Black
EMI Spring: Copper Alloy

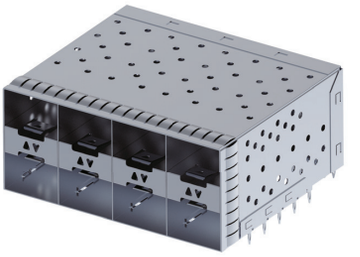

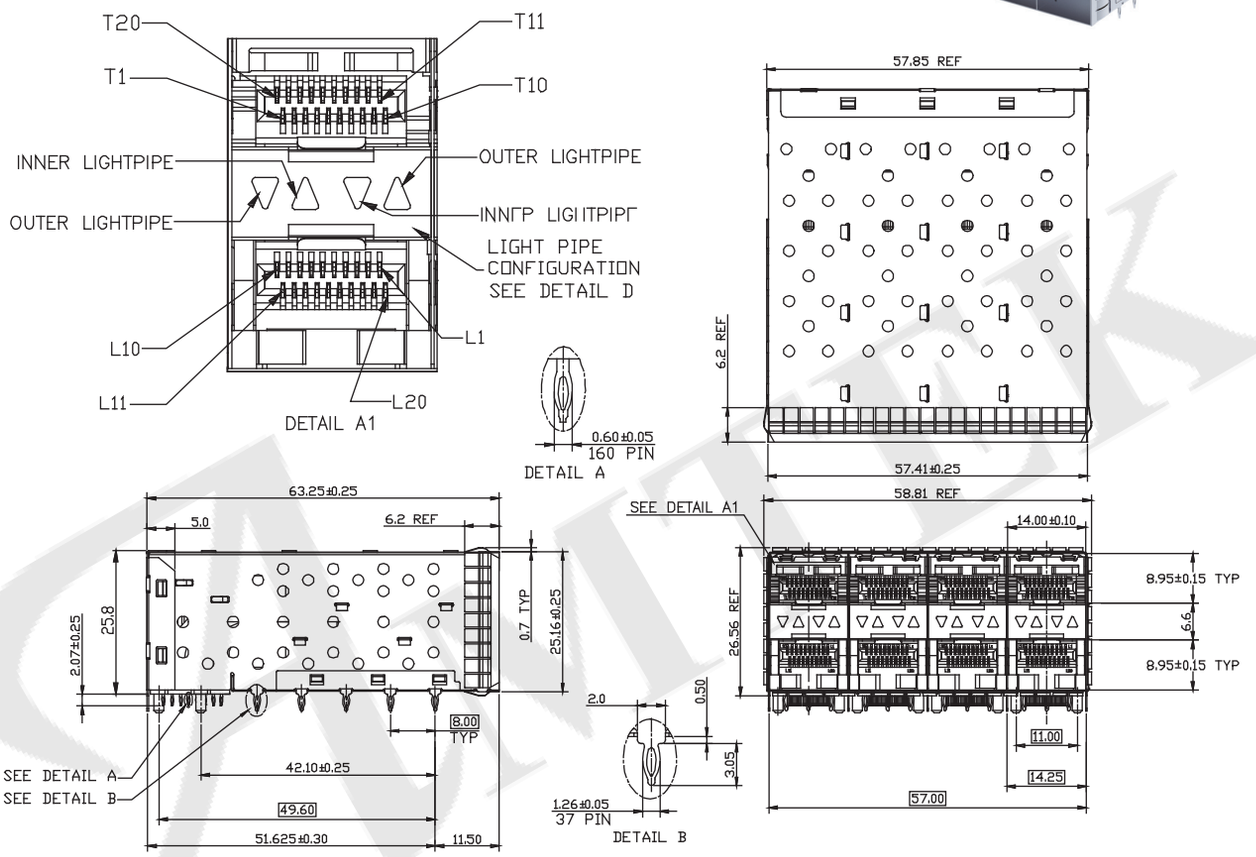

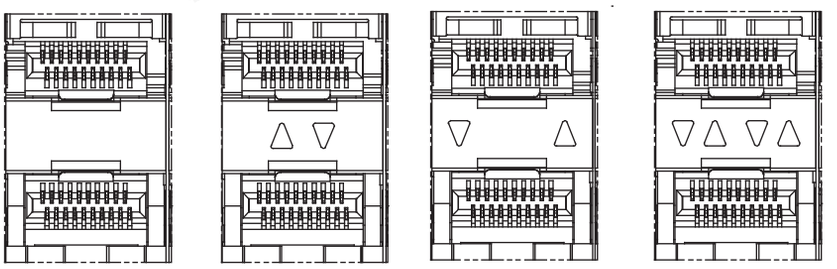

N:W/o Light Pipe 2:Inner 3:Outer 4:Inner+outer

LIGHT PIPE CONFIGURATION
DETAIL D

ORDER INFORMATION

5 H S P 2 0 1 - 2 4 X M P X X X - 0 1

- 2 4: 2×4 Ports
- X: N:W/O Light Pipe; 2:Inner Light Pipe; 3:Outer Light Pipe; 4:Inner+Outer Light Pipe
- M: M: Metal EMI
- P: P: Pin Type
- X X: SF: Selective 15u"; SD: Selective 30u"; SH: Selective 50u"
- X: X: Box

S FP+ Series

Pb RoHS

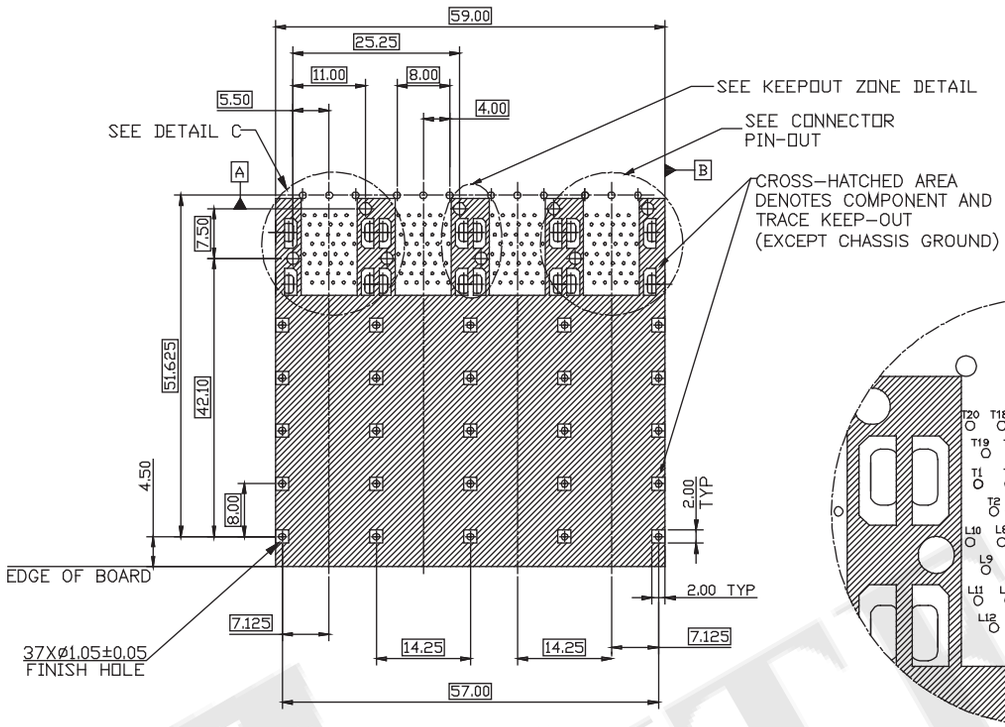

RECOMMENDED PCB LAYOUT-COMPONENT SIDE
RECOMMENDED PCB THICKNESS-2.63 MM

THE ENTIRE AREA OF THE CONNECTOR FOOTPRINT TO BE CONSIDERED THE KEEP OUT AREA FOR COMPONENTS (OTHER THAN LIGHT PIPE LED'S)
THIS AREA IS INDICATED BY THE DASHED LINE

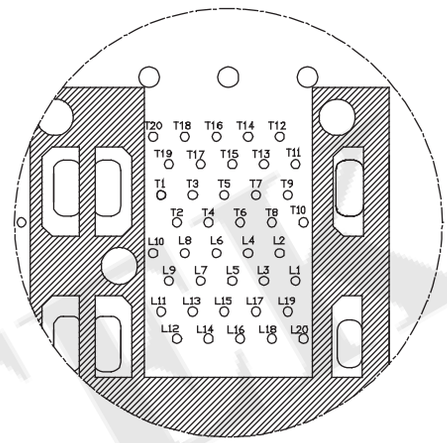

CONNECTOR PIN-OUT
COMPONENT SIDE OF BOARD

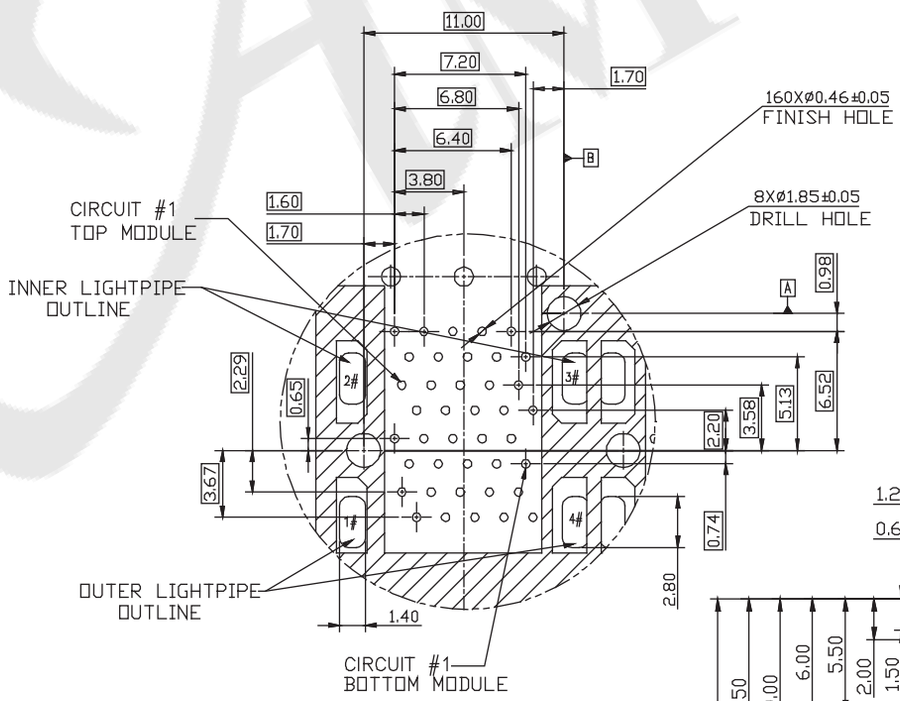

DETAIL C

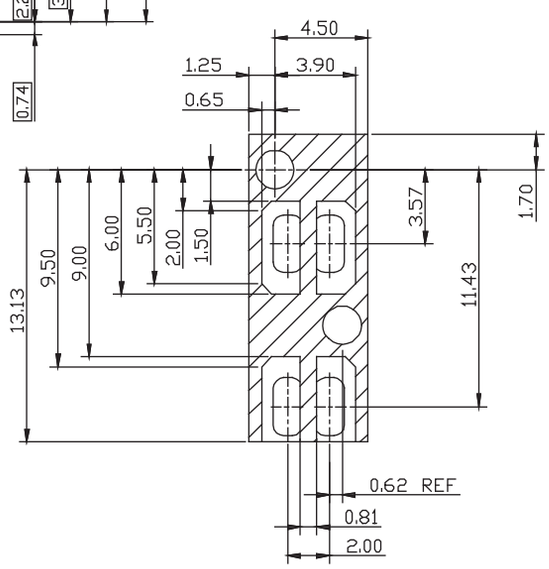

KEEPOUT ZONE