USB 3.1 Type C Connectors

6-21~6-25 • USB 3.1 Type C

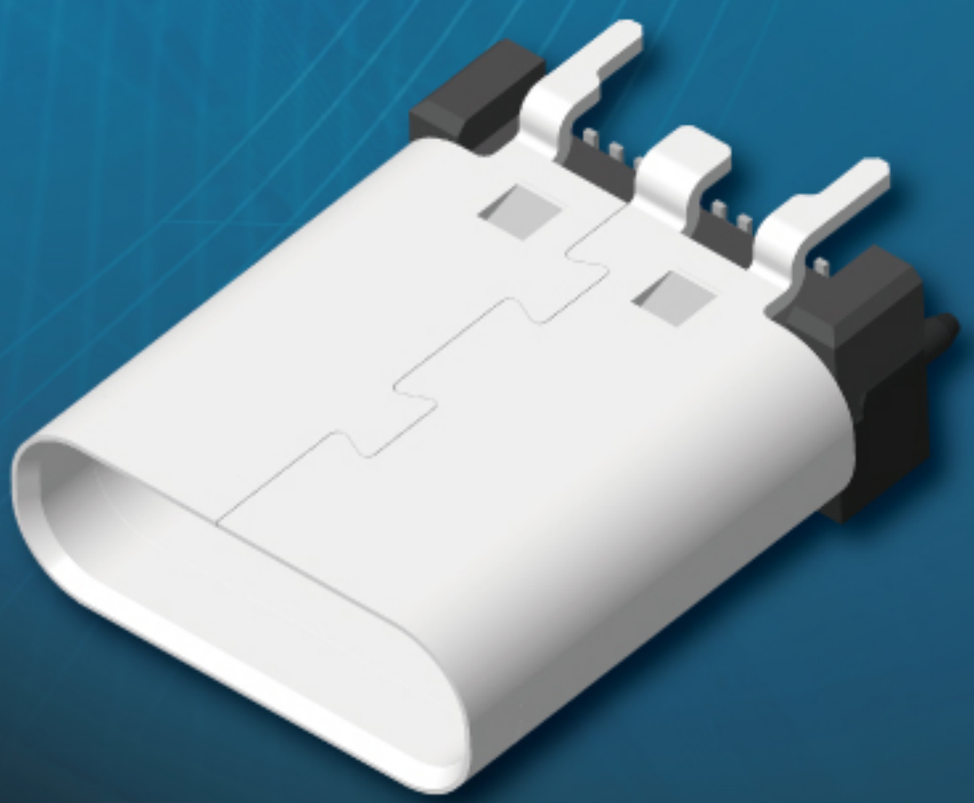

AMTEK Technology Co., Ltd

AMTEK

USB 3.1 Type C

USB 3.1 Type C Female Dip Straight Type 24P H=6.5mm

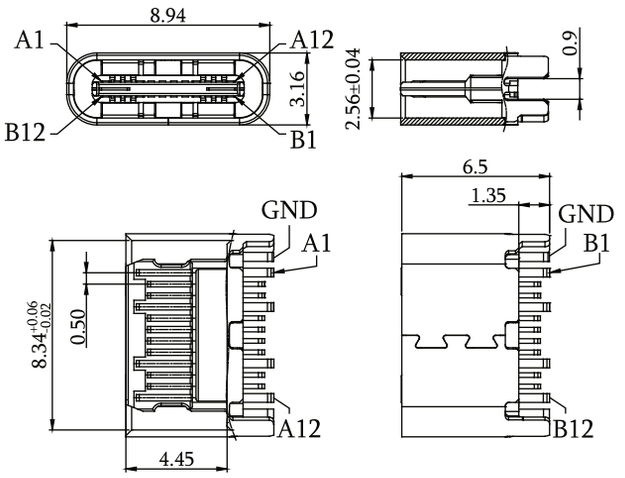

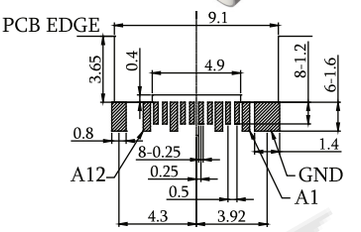

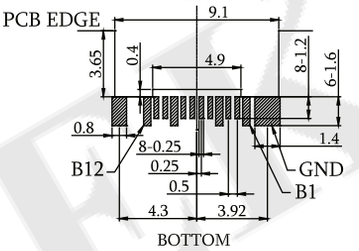

Pin No	Signal Name	Pin No	Signal Name	Pin No	Signal Name	Pin No	Signal Name
A1	GND	B12	GND	A7	D-	B6	D+
A2	TX1+	B11	RX1+	A8	SBU1	B5	CC2
A3	TX1-	B10	RX1-	A9	Vbus	B4	Vbus
A4	Vbus	B9	Vbus	A10	RX2-	B3	TX2-
A5	CC1	B8	SBU2	A11	RX2+	B2	TX2+
A6	D+	B7	D-	A12	GND	B1	GND

No.	Name	Material	Finish	Q'ty	Remark
1	Housing	Thermoplastic	Black	3	UL94V-0
2	Contact	Copper Alloy T:0.15	Gold/Tin Plated	24	Contact area: 30u" PD/Ni+Gold Flash Solder area: 80u"min. matte Tin Plated over Nickel
3	Gnd Plates	SUS T:0.10	Matte Tin Plated	3	
4	Shell	SUS T:0.30	Matte Tin Plated	1	

Recommended PCB Layout
(PCB TOLERANCE ±0.05)

P/N.:5US4C01TF-124XXBUHC1

S0:Selective
SF:Selective 15u"
SD:Selective 30u"

USB 3.1 Type C Female Dip Straight Type 24P H=8.25mm

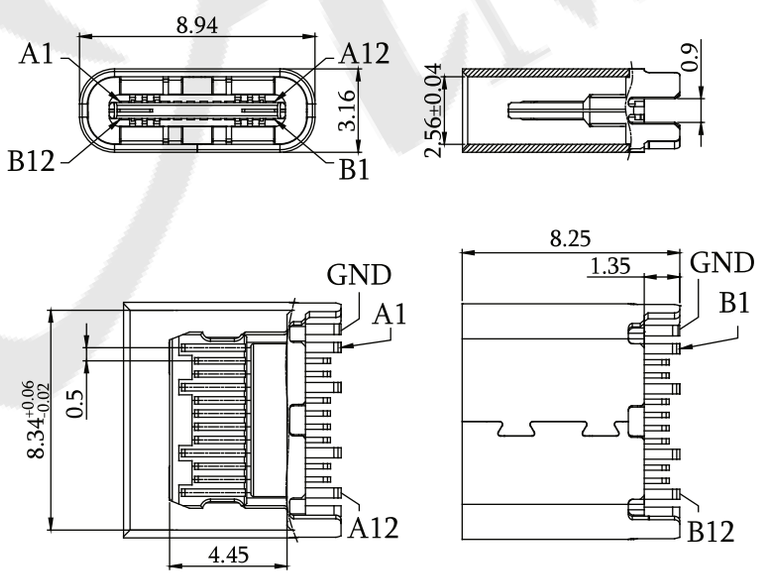

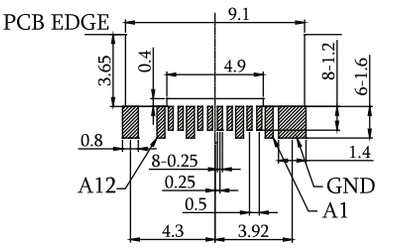

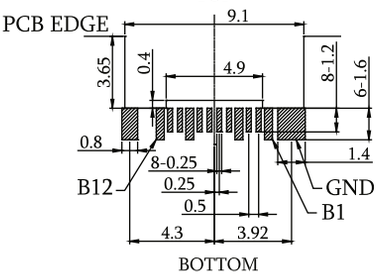

Pin No	Signal Name	Pin No	Signal Name	Pin No	Signal Name	Pin No	Signal Name
A1	GND	B12	GND	A7	D-	B6	D+
A2	TX1+	B11	RX1+	A8	SBU1	B5	CC2
A3	TX1-	B10	RX1-	A9	Vbus	B4	Vbus
A4	Vbus	B9	Vbus	A10	RX2-	B3	TX2-
A5	CC1	B8	SBU2	A11	RX2+	B2	TX2+
A6	D+	B7	D-	A12	GND	B1	GND

No.	Name	Material	Finish	Q'ty	Remark
1	Housing	Thermoplastic	Black	3	UL94V-0
2	Contact	Copper Alloy T:0.15	Gold/Tin Plated	24	Contact area: 30u" PD/Ni+Gold Flash Solder area: 80u"min. matte Tin Plated over Nickel
3	Gnd Plates	SUS T:0.10	Matte Tin Plated	3	
4	Shell	SUS T:0.30	Matte Tin Plated	1	

Recommended PCB Layout
(PCB TOLERANCE ±0.05)

P/N.:5US4C01TF-124XXBUHC2

S0:Selective
SF:Selective 15u"
SD:Selective 30u"

USB 3.1 Type C Female SMT R/A Type 24P

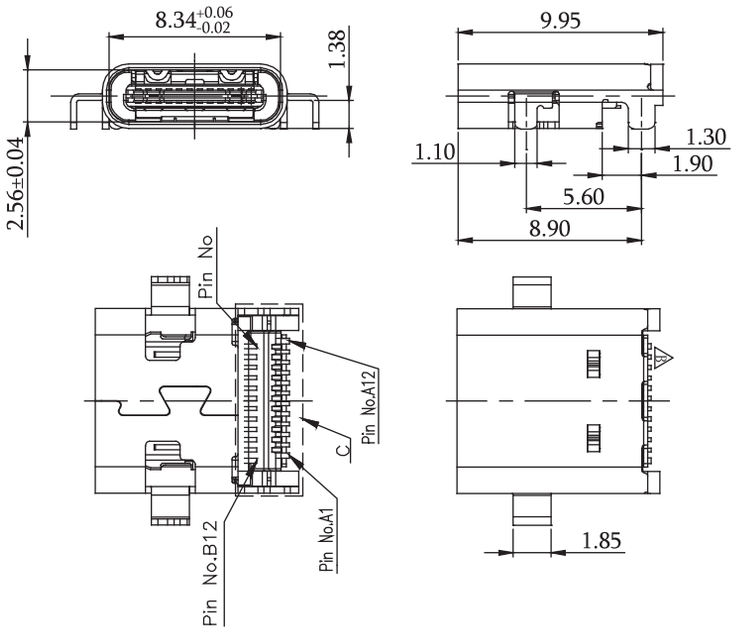

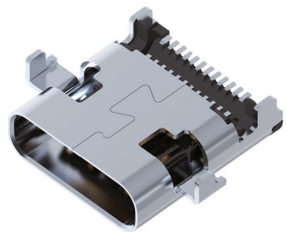

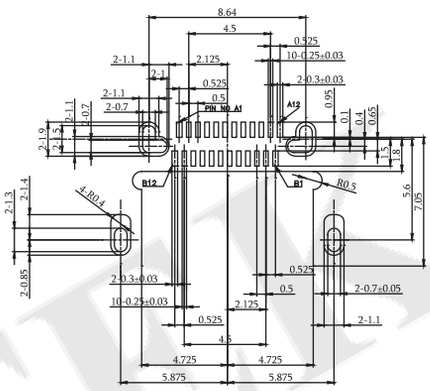

Recommended PCB Layout
(PCB TOLERANCE ±0.05)

No.	Name	Material	Finish	Q'ty	Remark
1	Molding A	LCP	Black	1	UL94V-0
2	Contact-Long	Copper Alloy	Gold/Tin Plated	12	
3	Contact-Short	Copper Alloy	Nickel Plated	12	
4	Mid-Plate	SUS	Nickel Plated	1	
5	Top EMI Pad	SUS	Nickel Plated	1	
6	Bottom EMI Pad	SUS	Nickel Plated	1	
7	Shell	SUS	Nickel Plated	1	
8	Molding B	LCP	Black	1	

P/N.:5US4C01MF-124S0BUHQ1

USB 3.1 Type C Female SMT R/A Type 24P

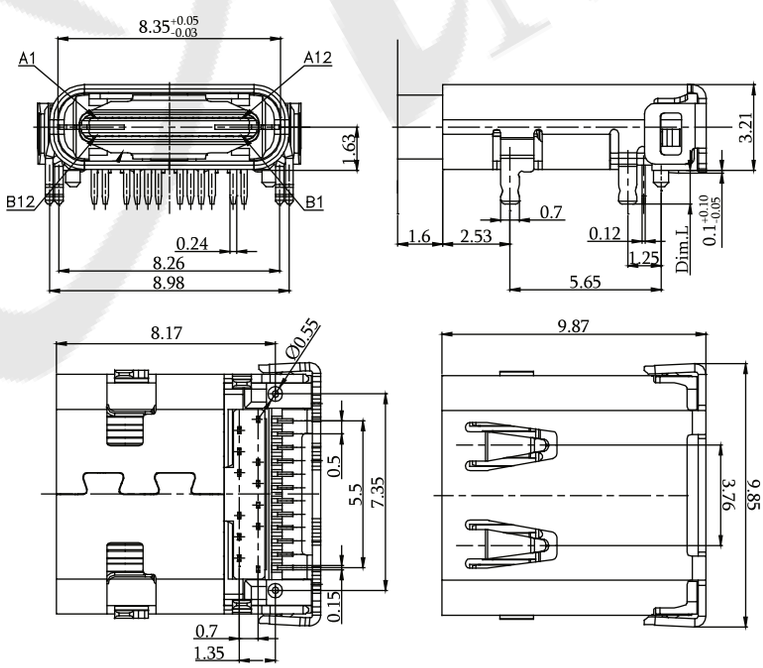

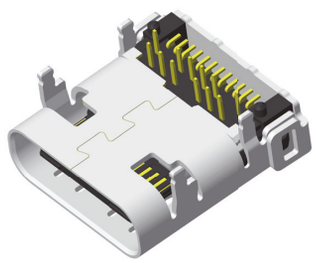

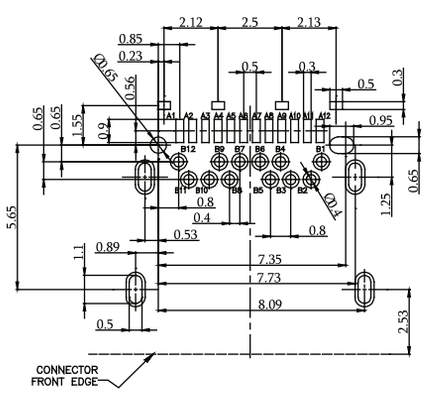

Recommended PCB Layout
(PCB TOLERANCE ±0.05)

No.	Name	Material	Finish	Q'ty	Remark
1	Shell	SUS	Nickel Plated	1	
2	Latch	SUS	Nickel Plated	12	
3	EMI	SUS	Nickel Plated	12	
4	SMT Connector	Copper Alloy	Gold Plated	1	
5	DIP Connector	Copper Alloy	Gold Plated	1	
6	Latch Housing	Termoplastic	Black	1	UL94V-0
7	SMT Housing	Termoplastic	Black	1	UL94V-0
8	DIP Housing	Termoplastic	Black	1	UL94V-0

P/N.:5US4C02MF-124G0BUHQX

Dim.L 1:1.25
2:0.80
3:1.10

USB 3.1 Type C Female SMT R/A Type 24P

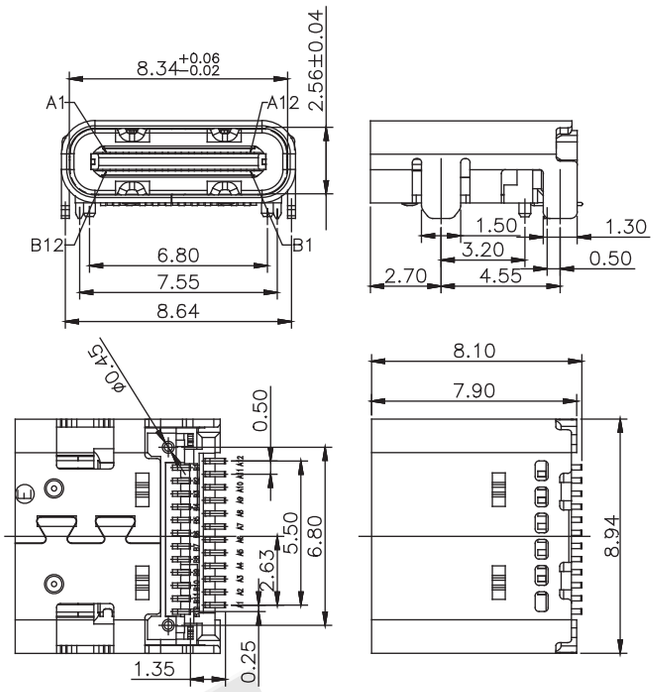

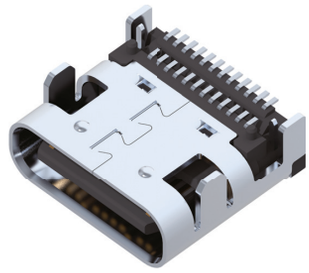

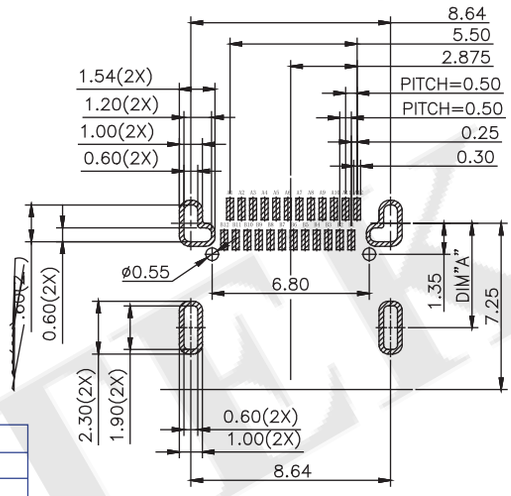

Recommended PCB Layout
(PCB TOLERANCE ±0.05)

No.	Name	Material	Finish	Q'ty	
1	Housing	LCP	Black	1	
2	Contact	Copper Alloy T=0.12	Gold Flash	1	
3	Gnd Plates	SUS 301 T=0.12	Matte Tin Plated	1	Contact area: 30u" PD/Ni+Gold Flash Solder area: 80u"min. matte Tin Plated over Nickel
4	Spring	SUS 304 T=0.10	Matte Tin Plated	1	
5	Shell	SUS 304 T=0.30		1	

P/N.:5US4C04MF-124G0BUHQ1

USB 3.1 Type C Female SMT R/A Type 24P

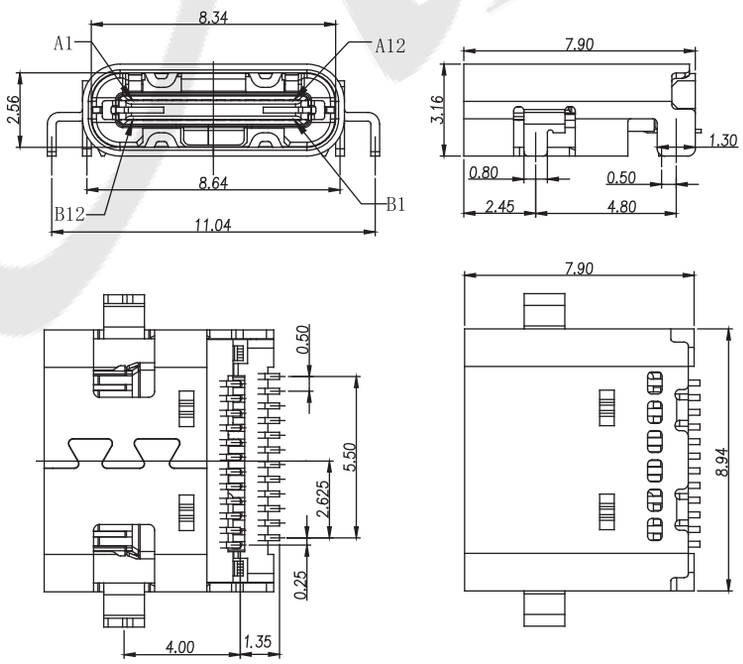

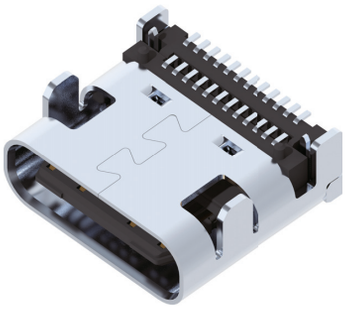

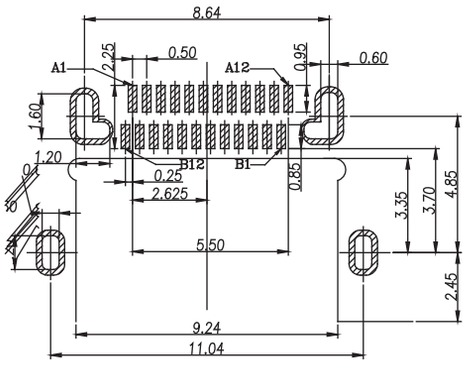

Recommended PCB Layout
(PCB TOLERANCE ±0.05)

No.	Name	Material	Finish	Q'ty	Remark
1	Housing	LCP	Black	1	UL94V-0
2	Contact	C5191	Gold/Tin Plated	1	
3	Shell	SUS301	Nickel Plated	1	

P/N.:5US4C06MF-124SDBUH41

USB 3.1 Type C Female SMT R/A Type 24P

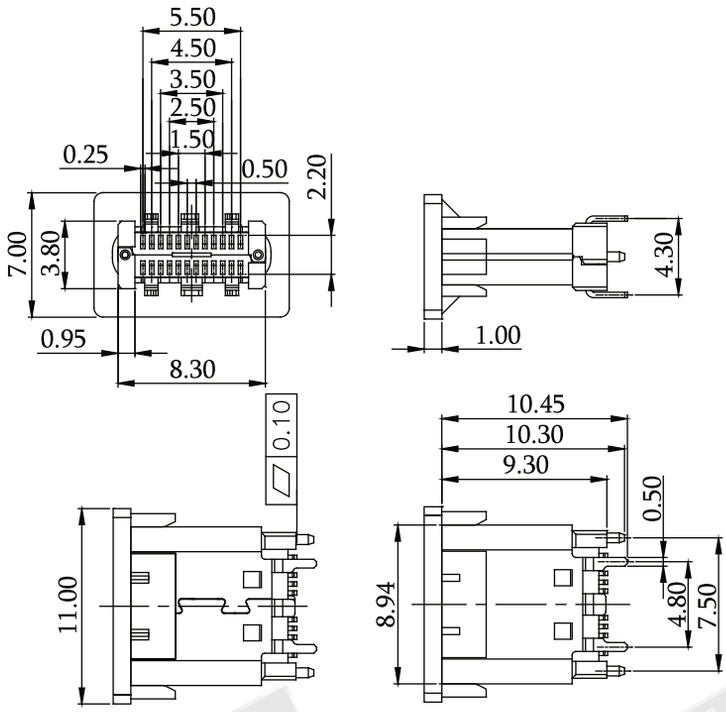

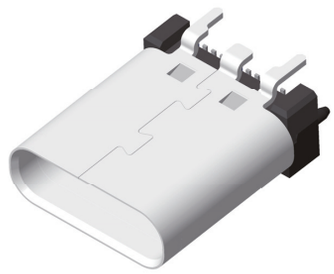

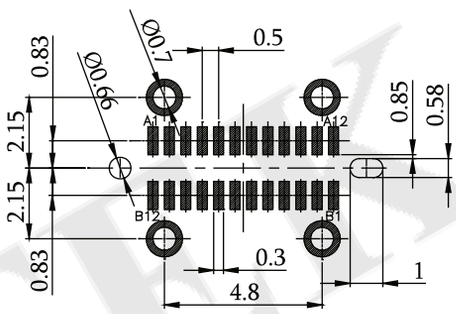

Recommended PCB Layout
(PCB TOLERANCE ±0.05)

No.	Name	Material	Finish	Q'ty	Remark
1	Housing	Thermoplastic	Black	3	UL94V-0
2	Contact	Copper Alloy T:0.15	Gold/Tin Plated	24	Contact area: 30u" PD/Ni+Gold Flash Solder area: 80u'min. matte Tin Plated over Nickel
3	Gnd Plates	SUS T:0.35	Matte Tin Plated	1	
4	Shell 1	SUS	No Plated	1	
5	Shell 2	Copper Alloy T:0.15	Nickel Plated	1	

P/N.:5US4C03MF-124S0BURQ1

USB 3.1 Type C Male Straddle Type 24P

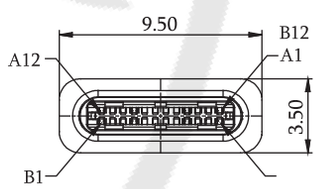

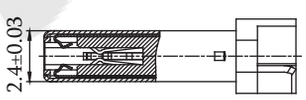

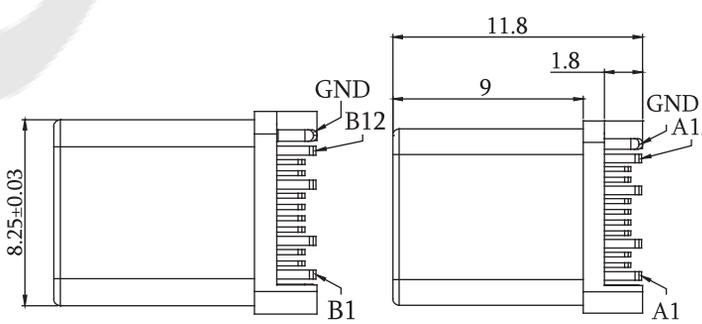

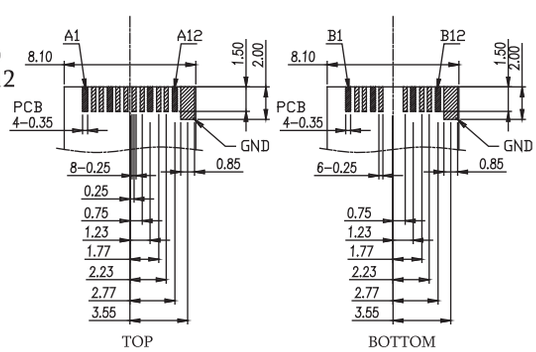

Recommended PCB Layout
(PCB TOLERANCE ±0.05)

P/N.:5US4C01TM-124XXBUHCX

S0:Selective
SF:Selective 15u"
SD:Selective 30u"

1: W/O Shell
2: Short Shell, Type1
3: Short Shell, Type2
4: Long Shell, Type1
5: Long Shell, Type2

No.	Name	Material	Finish	Q'ty	Remark
1	Housing	Thermoplastic	Black	3	UL94V-0
2	Contact	Copper Alloy T:0.15	Gold/Tin Plated	24	Contact area: 30u" PD/Ni+Gold Flash Solder area: 80u'min. matte Tin Plated over Nickel
3	Gnd Plates	SUS T:0.35	Matte Tin Plated	1	
4	Shell 1	SUS	No Plated	1	
5	Shell 2	Copper Alloy T:0.15	Nickel Plated	1	

USB 3.1 Type C Male Solder Type 24P

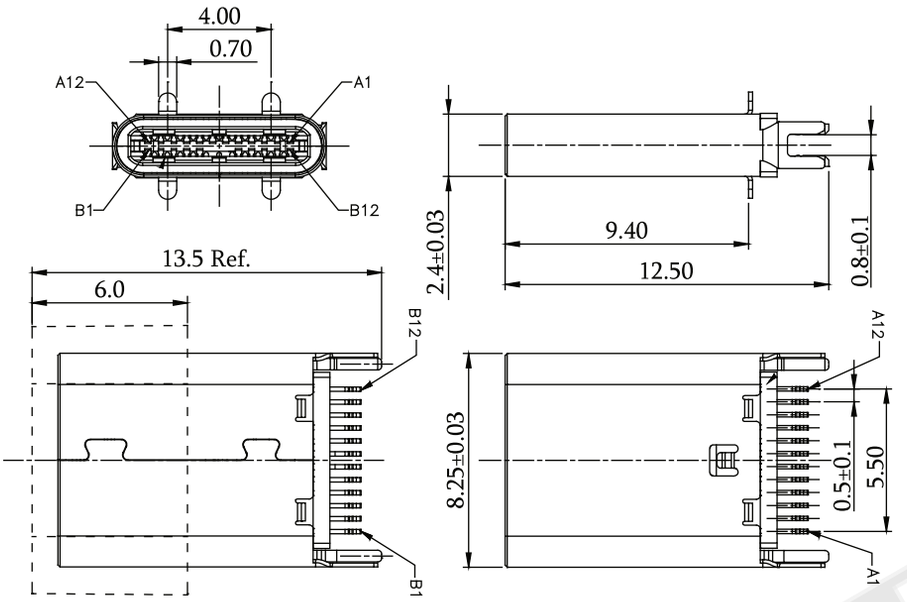

No.	Name	Material	Finish	Q'ty	Remark
1	Hosuing	Hi-Temp. Plastic		2	UL94V-0
2	Contact	Copper Alloy T:0.15	Gold/Tin Plated	2	
3	EMI Spring	Stainless Steel		2	
4	I/M Part	Hi-Temp. Plastic	Gold/Tin Plated	2	
5	Latch	Stainless Steel	Ni 50u" Min.	1	
6	Shell	Stainless Steel	Ni 30u" Min.	1	
7	Cover	Hi-Temp. Plastic		1	Option

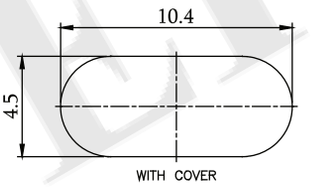

P/N.:5US4C05SM-124SDBUAQ1

USB 3.1 Type C Male Solder Type 24P

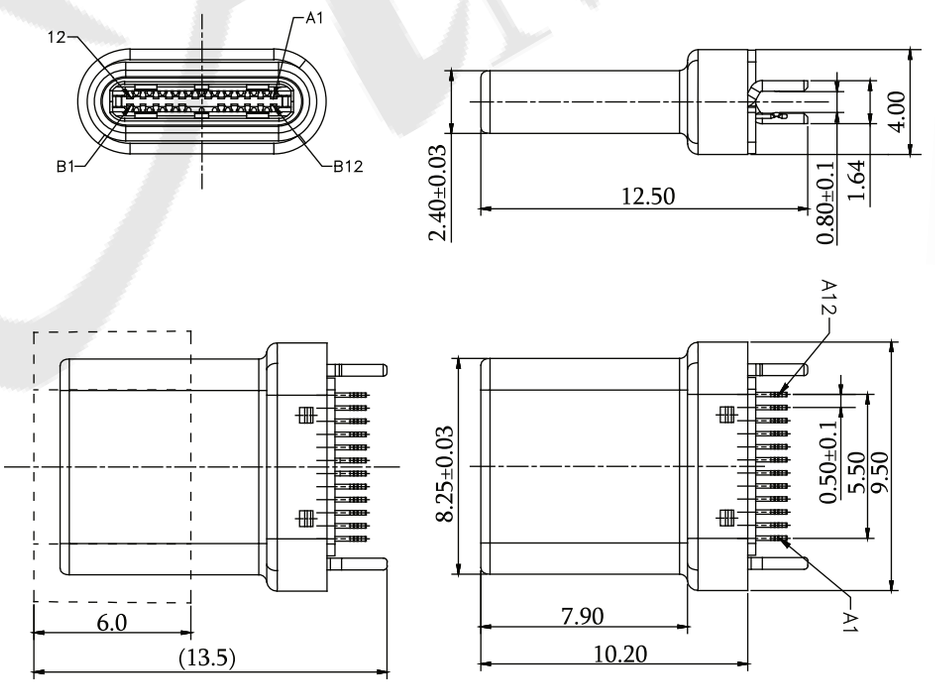

No.	Name	Material	Finish	Q'ty	Remark
1	Hosuing	Hi-Temp. Plastic		2	UL94V-0
2	Contact	Copper Alloy T:0.15	Gold/Tin Plated	2	
3	EMI Spring	Stainless Steel		2	
4	I/M Part	Hi-Temp. Plastic	Gold/Tin Plated	2	
5	Latch	Stainless Steel	Ni 50u" Min.	1	
6	Shell	Stainless Steel	Ni 50u" Min.	1	
7	Cover	Hi-Temp. Plastic		1	Option

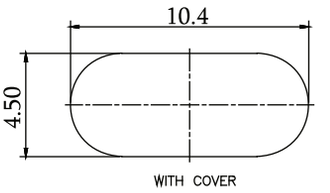

P/N.: 5US4C06SM-124SDWUAQ1

Pb RoHS