I / O Connectors

5-68~5-75 • Card Connectors

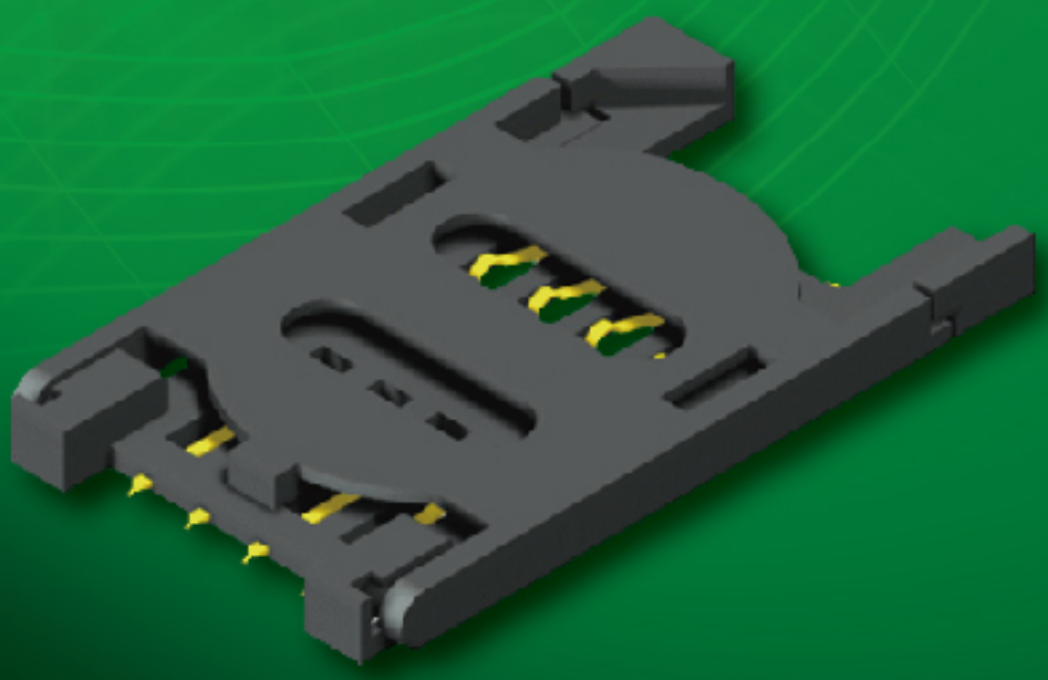

AMTEK Technology Co., Ltd

SD Card Holder Push-Pull Type 11P H=2.9 With Peg

Specifications
Current Rating: 0.5 AMP
Voltage Rating: 30VRMS
Insulation Resistance: 1000 MΩ Min.
Contact Resistance: 100mΩ Max.
Dielectric Voltage: 500V AC for one minute
Operation Temperature: -25°C to +65°C

Material
Insulator: Hi-Temp. Thermoplastic, UL 94V-0
Contact: Copper Alloy
Shell: Copper Alloy

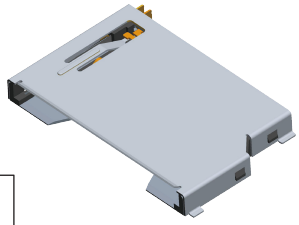

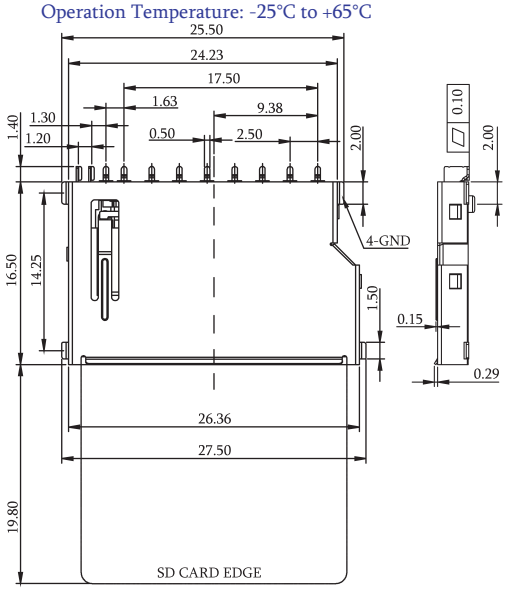

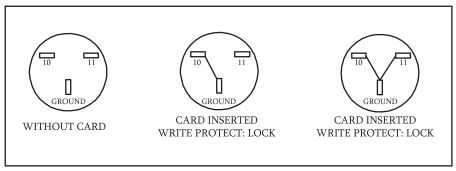

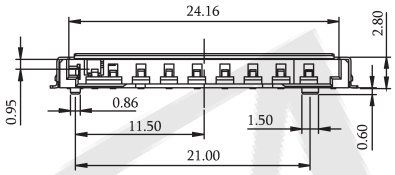

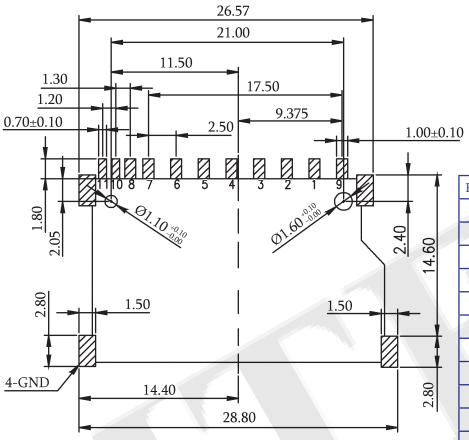

Recommended PCB Layout
(PCB TOLERANCE ±0.05)

Part No.	Name	Description
1#	CD / DAT3	Card Detect / Data I/O
2#	CMD	Command
3#	VSS1	Ground
4#	VDD	Power
5#	CLK	Clock
6#	VSS2	Ground
7#	DAT0	Data I/O
8#	DAT1	Data I/O
9#	DAT2	Data I/O
10#	CD	
11#	WP	

P/N.:5KSDS-11S0PHL02

SD Card Holder W/O Cover Type 09P H=3.4

Specifications
Current Rating: 1 AMP
Insulation Resistance: 50MΩ Min.
Contact Resistance: 20mΩ Max.
Dielectric Voltage: 250V AC for one minute
Operation Temperature: -55°C to +85°C

Material
Insulator: Hi-Temp. Thermoplastic, UL 94V-0
Contact Pin: Copper Alloy

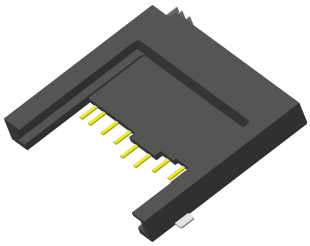

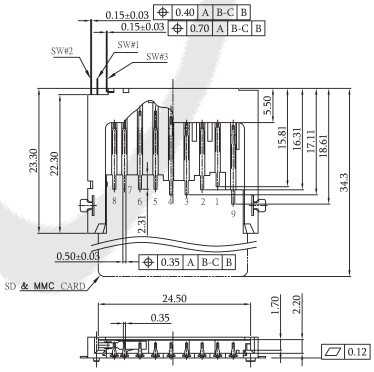

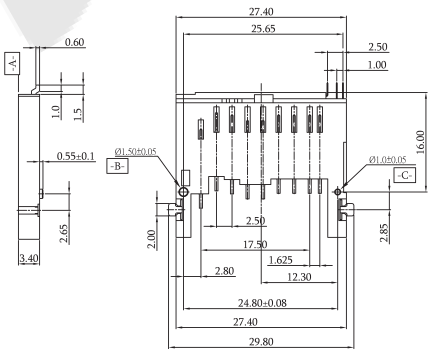

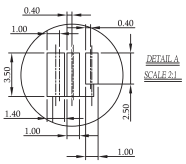

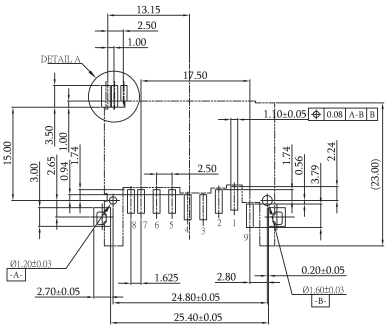

Recommended PCB Layout
(PCB TOLERANCE ±0.05)

P/N.:5KSDZ-09XXPXB01

S0: Selective Plated
SB: Selective 10u" Plated
SF: Selective 15u" Plated

A:Tray W/O Cap
H:T/R W/O Cap

Sim Card Holder Hinge Type 06P H=2.5

Specifications
Current Rating: 0.5 AMP
Insulation Resistance: 500MΩ Min.
Contact Resistance: 50mΩ Max.
Dielectric Voltage: 250V AC for one minute
Operation Temperature: -40˚C to +105˚C

Material
Insulator: LCP, UL 94V-0, BLack
Contact: Phosphor Bronze

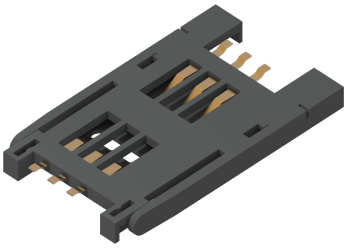

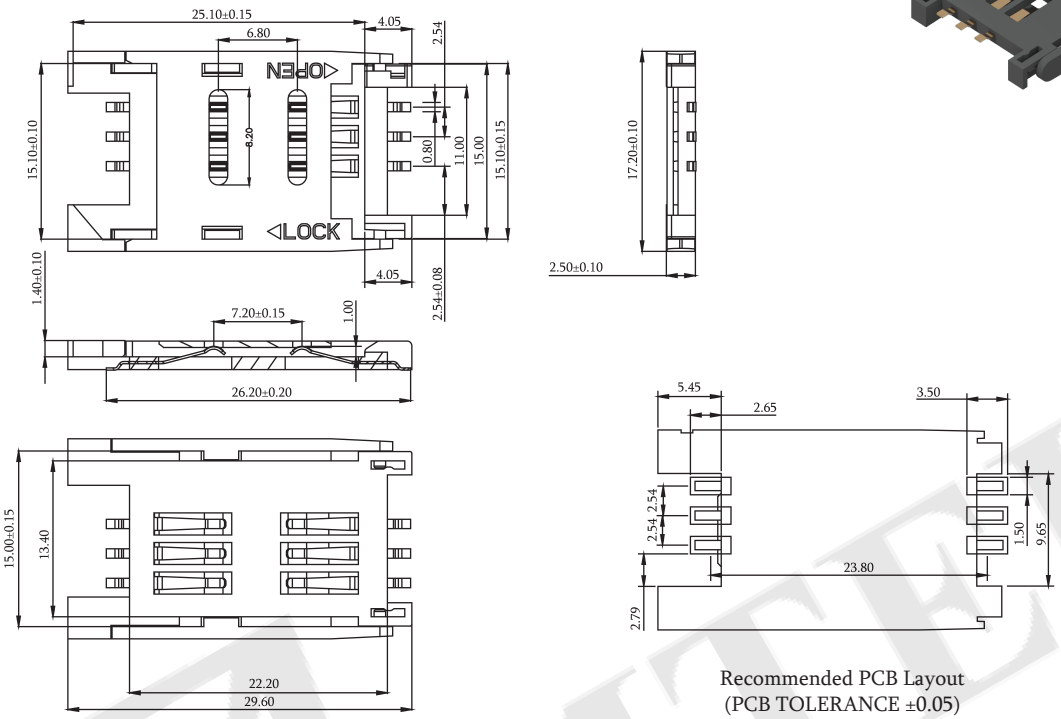

Recommended PCB Layout
(PCB TOLERANCE ±0.05)

P/N.:5KSIG-06S0NHL01

Sim Card Holder Push-Pull Type 06P H=1.75

Specifications
Current Rating: 1.0 AMP
Voltage Rating: 30V
Insulation Resistance: 100MΩ Min.
Contact Resistance: 50mΩ Max.
Dielectric Voltage: 100V AC for one minute
Operation Temperature: -30˚C to +80˚C

Material
Insulator: Hi-Temp Thermoplastic, UL 94V-0, BLack
Contact: Copper Alloy
Shell: Stainless Steel

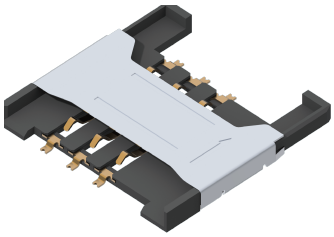

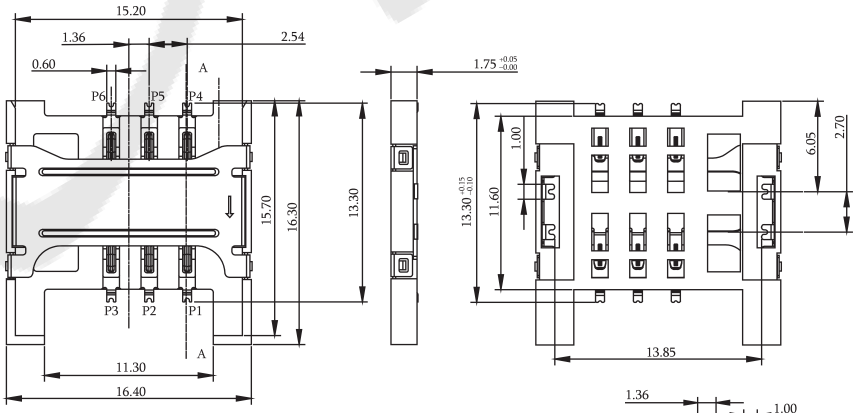

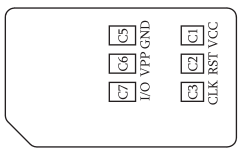

SIM CARD

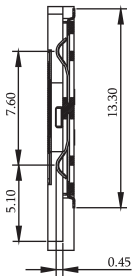

SECTION A-A

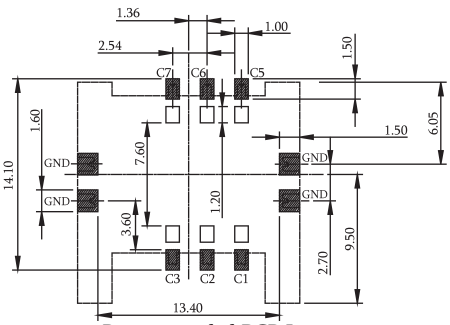

Recommended PCB Layout
(PCB TOLERANCE ±0.05)

Part No.	Description
P1#	C1:VCC
P2#	C2:RST
P3#	C3:CLK
P4#	C5:GND
P5#	C6:VPP
P6#	C7:I/O

P/N.:5KSIS-06S0NHL01

RoHS

Sim Card Holder Push-Push Type 06+02P H=1.8

Specifications
Current Rating: 0.5 AMP
Insulation Resistance: 1000MΩ Min.
Contact Resistance: 100mΩ Max.
Dielectric Voltage: 125V AC for one minute
Operation Temperature: -40˚C to +70˚C

Material
Insulator: LCP, UL 94V-0
Contact: Copper Alloy
Shell: Stainless Steel

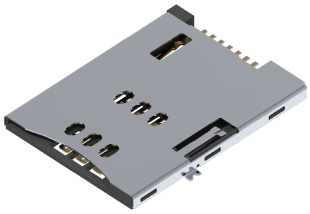

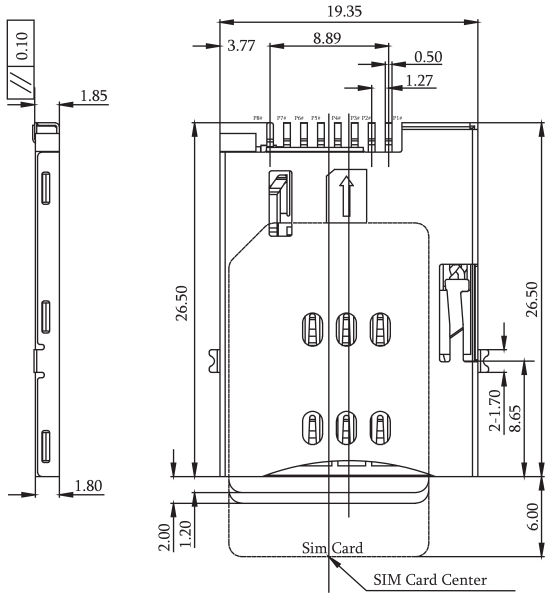

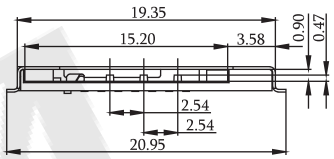

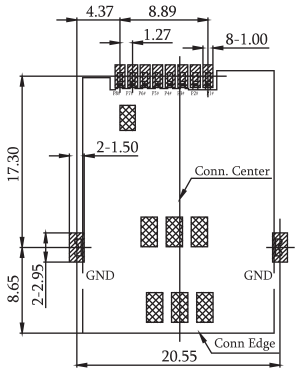

Recommended PCB Layout
(PCB TOLERANCE ±0.05)

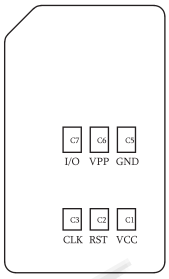

Circuit Diagram For Card Detect Switch	
02	03
INSERT CARD (NORMAL ON) CD SW LOWER CD SW UPPER	WITHOUT CARD (NORMAL OFF) CD SW LOWER CD SW UPPER

Part No.	Description
P1#	C1:VCC
P2#	C5:GND
P3#	C2:RST
P4#	C6:VPP
P5#	C3:CLK
P6#	C7:I/O
P7#	POL
P8#	DET

P/N.:5KSIP-08G0NHL01

Sim Card Holder Push-Push Type 08P H=1.95

Specifications
Current Rating: 0.5AMP
Insulation Resistance: 100MΩ Min at 500V DC.
Contact Resistance: 100mΩ Max.
Dielectric Voltage: 500V AC for one minute
Operation temperature: -40°C ~ +85°C
Mating Cycles: 5000 cycles(speed: 400~600 cycles/h)

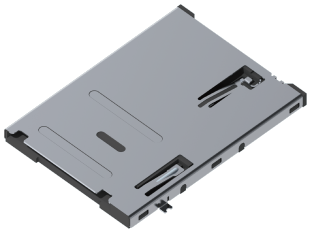

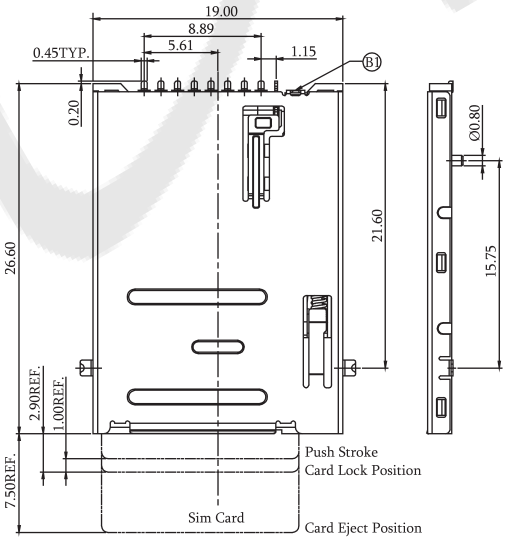

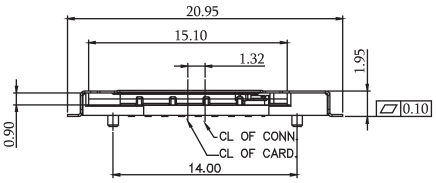

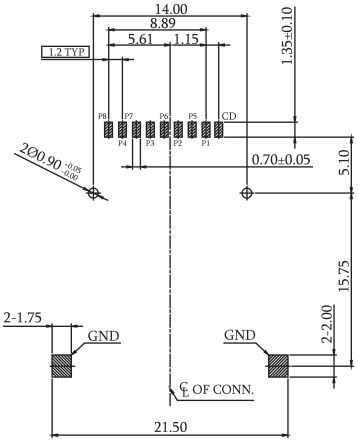

Recommended PCB Layout
(PCB TOLERANCE ±0.05)

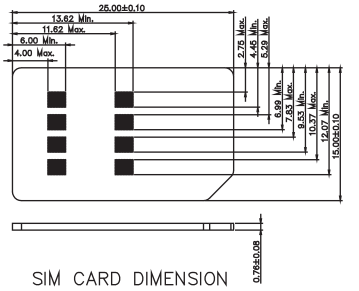

SIM CARD DIMENSION

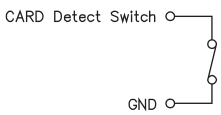

Normal....SHORT
Inserting Card....OPEN

Connctor Terminal NO.	Part No.
Pin1	VCC: RWR Signal and GND
Pin2	RST: Reset signal
Pin3	CLK: Clocking signal
Pin4	Reserved
Pin5	GND: RWR Signal and GND
Pin6	VPP: Programming Voltage
Pin7	I/O: Serial date input/output
Pin8	Reserved

P/N.:5KSIP-08S0PHE01

Micro Sim Card Holder Hinge Type 06P With Holder H=1.5

Specifications
Current Rating: 1 AMP
Insulation Resistance: 1000MΩ Min.
Contact Resistance: 100mΩ Max.
Dielectric Voltage: 250V AC for one minute
Operation Temperature: -30˚C to +80˚C

Material
Insulator: LCP, UL 94V-0
Contact: Copper Alloy
Shell: Stainless Steel

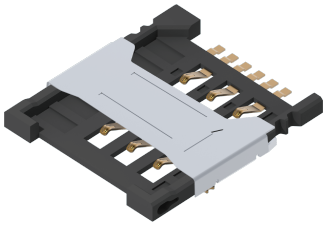

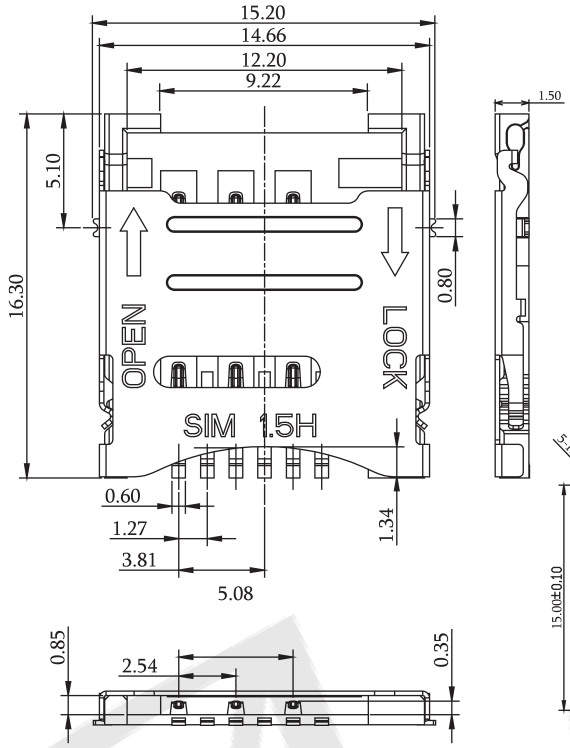

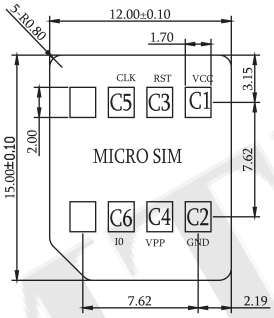

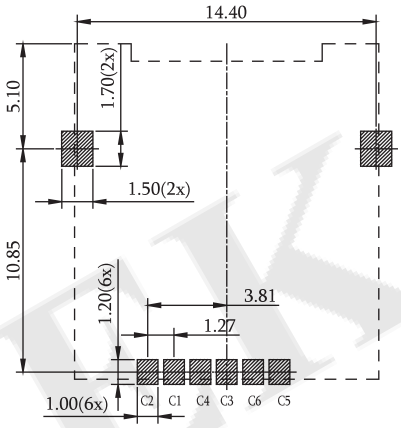

Recommended PCB Layout
(PCB TOLERANCE ±0.05)

P/N.:5KMSG-06S0NHL01

Micro Sim Card Holder Push-Pull Type 08P H=1.27

Specifications
Current Rating: 0.5 AMP
Insulation Resistance: 500MΩ Min.
Contact Resistance: 30mΩ Max.
Dielectric Voltage: 500V AC for one minute
Operation Temperature: -40˚C to +85˚C

Material
Insulator: Hi-Temp. Plastic, UL 94V-0, Black
Contact Pin: Copper Alloy

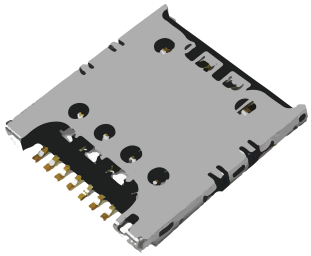

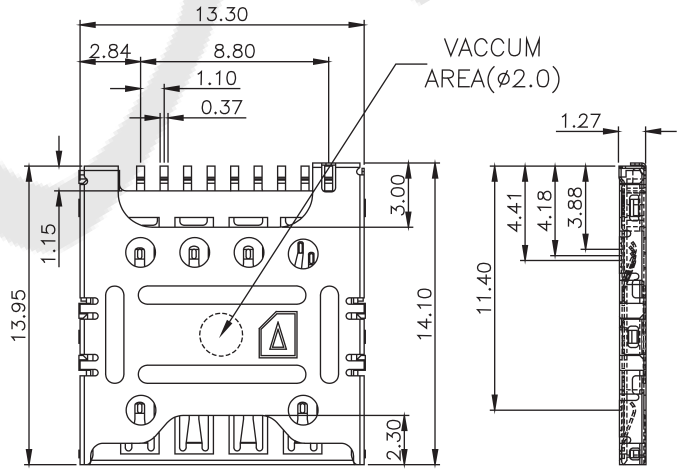

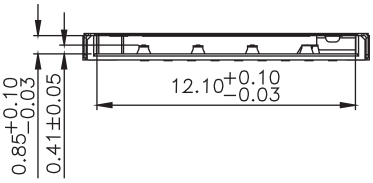

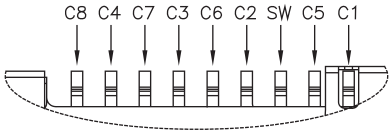

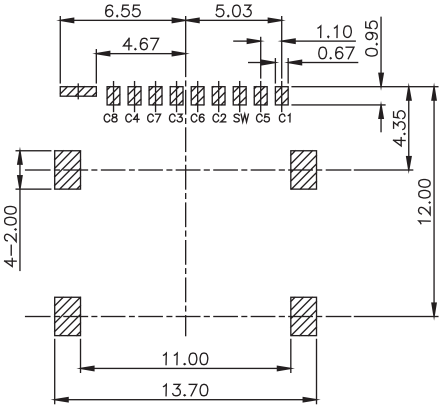

Recommended PCB Layout
(PCB TOLERANCE ±0.05)

P/N.:5KMSS-08G0NHB03

RoHS

Micro Sim Card Holder Push-Push Type 06P H=1.35

Specifications
Current Rating: 0.5 AMP
Voltage Rating : 50V DC Max.
Insulation Resistance: 1000MΩ Min.
Contact Resistance: 100mΩ Max.
Dielectric Voltage: 500V AC for one minute
Mating Cycles: 5000 Insertions
Ambient Temperature Range: -20°C to +85°C
Storage Temperature Range: -40°C to +70°C

Material
Housing: Hi-Temp Temperature, UL94V-0, Black
Terminal: Copper Alloy
Shell: Stainless Steel

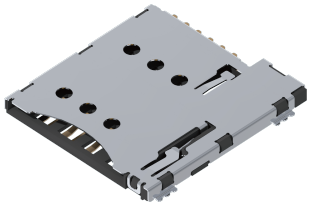

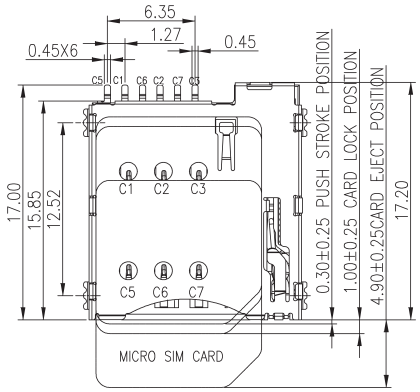

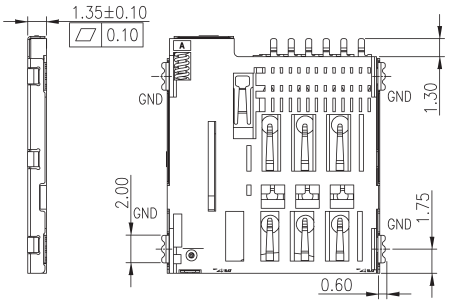

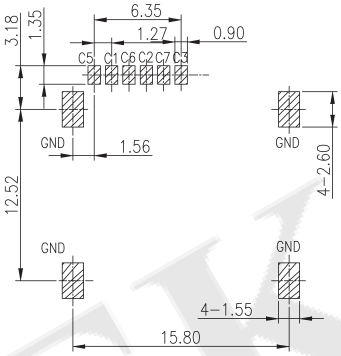

Recommended PCB Layout
(PCB TOLERANCE ±0.05)

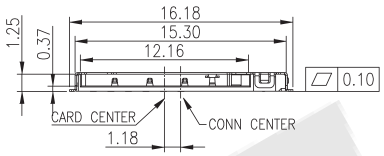

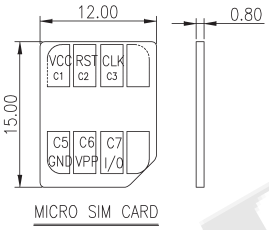

SIM pin Assignment	
PIN#	Name
C1	VCC
C2	RST
C3	CLK
C5	GND
C6	VPP
C7	I/O

P/N.:5KMSP-06G0NHL02

TF Card Holder Hinge Type 08P H=1.9

Specifications
Current Rating: 0.5 AMP
Insulation Resistance: 500MΩ Min.
Contact Resistance: 100mΩ Max.
Dielectric Voltage: 500V AC for one minute
Operation Temperature: -40°C to +85°C

Material
Insulator: Hi-Temp Thermoplastic, UL 94V-0,Black
Contact: Copper Alloy
Shell: Stainless Steel

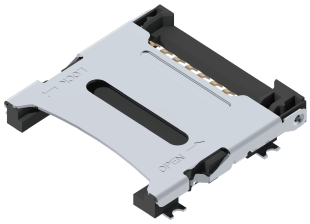

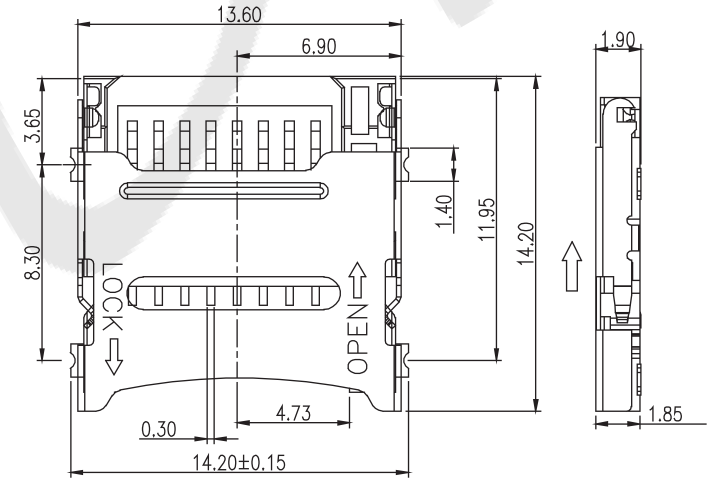

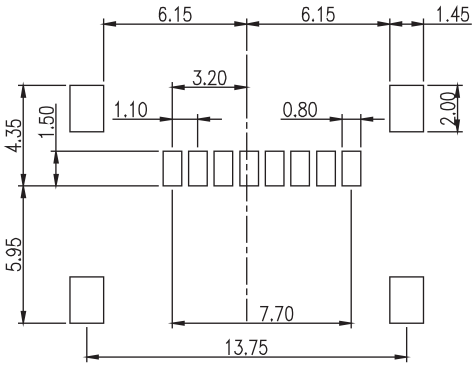

Recommended PCB Layout
(PCB TOLERANCE ±0.05)

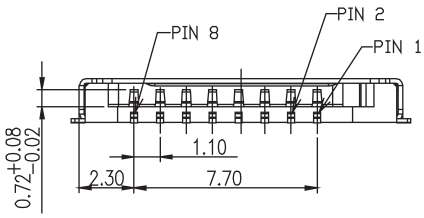

P/N.:5KTFG-08S0NHL01

TF Card Holder Push-Push Type 10P H=1.85

Specifications
Current Rating: 1.0 AMP
Rating Voltage: 30V AC
Insulation Resistance: 1000MΩ Min.
Contact Resistance: 50mΩ Max.
Dielectric Voltage: 500V AC for one minute
Operation Temperatue: -40°C to +85°C
Durability: 10000 Cycles Min.

Material
Housing: Hi-Temp Temperature, UL94V-0, Black
Terminal: Copper Alloy
Shell: Stainless steel

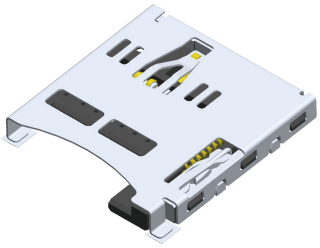

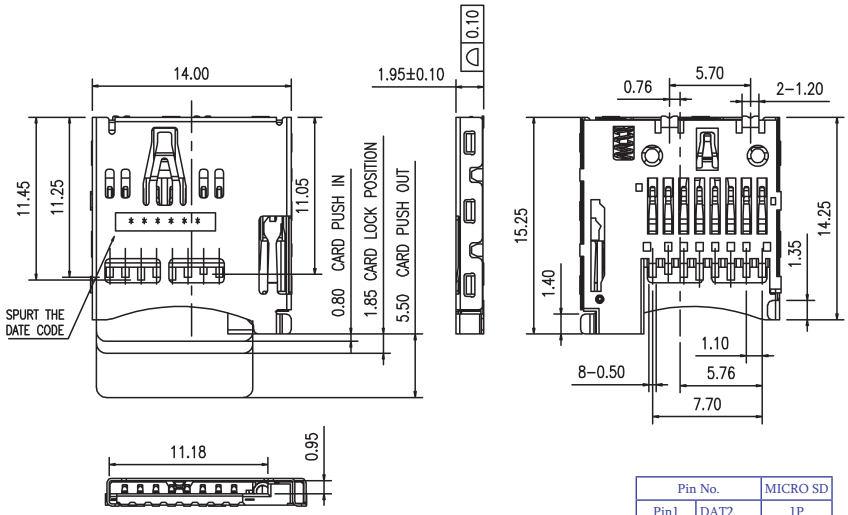

Pin No.		MICRO SD
Pin1	DAT2	1P
Pin2	CD/DAT3	2P
Pin3	CMD	3P
Pin4	VDD	4P
Pin5	CLK	5P
Pin6	VSS	6P
Pin7	DAT0	7P
Pin8	DAT1	8P
Pin9	CARD DETECT	
Pin10		

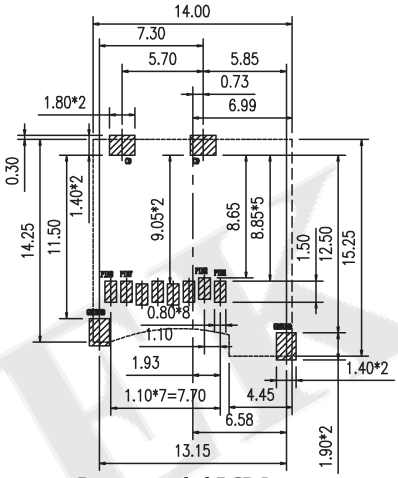

Recommended PCB Layout
(PCB TOLERANCE ±0.05)

P/N.:5KTFP-10S0NHL04

TF Card Holder Push-Push Type 08+01P H=1.88

Specifications
Current Rating: 0.5 A
Rating Voltage: 100V AC
Insulation Resistance: 1000MΩ Min.
Contact Resistance: 100mΩ Max.
Dielectric Voltage: 500V AC for one minute
Operation Temperature: -25°C to +85°C

Material
Housing: Hi-Temp Temperature, UL94V-0, Black
Terminal: Copper Alloy
Shell: Stainless steel

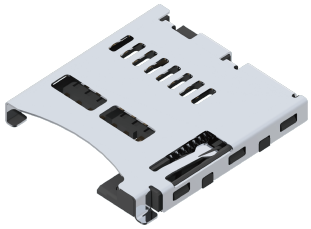

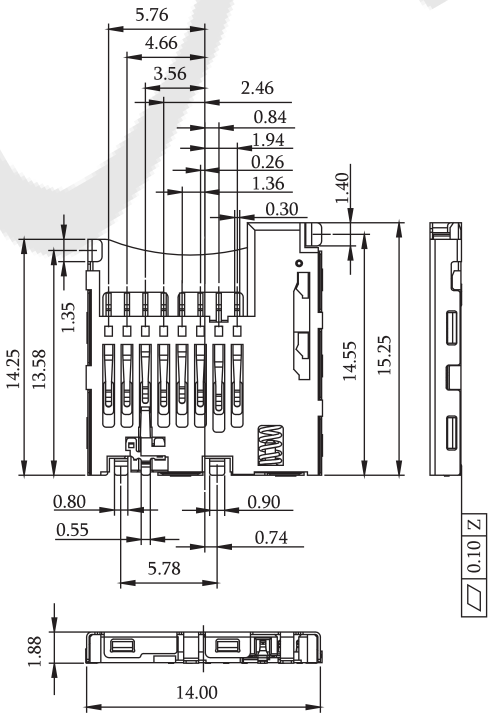

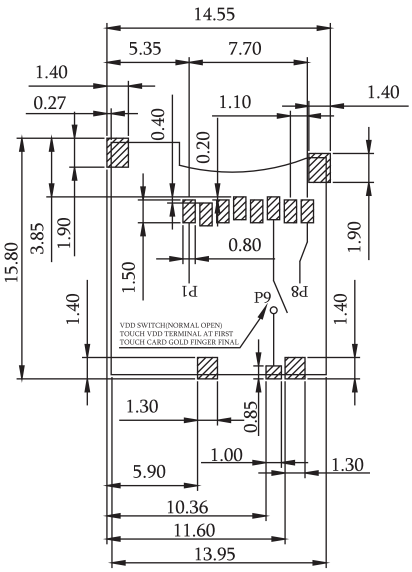

Recommended PCB Layout
(PCB TOLERANCE ±0.05)

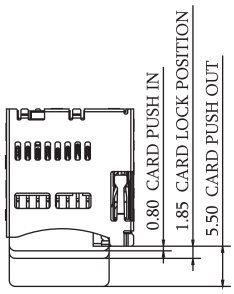

CIRCUIT:	
CD GROUND	CD GROUND
WITHOUT CARD	CARD INSERTED

Pin No.		MICRO SD
Pin1	DAT2	1P
Pin2	CD/DAT3	2P
Pin3	CMD	3P
Pin4	VDD	4P
Pin5	CLK	5P
Pin6	VSS	6P
Pin7	DAT0	7P
Pin8	DAT1	8P
Pin9	CARD DETECT	

P/N.:5KTFP-08S0NHL02

TF Card Holder Push-Push Type 08+01P H=2.0

Specifications
Current Rating: 0.5 AMP
Insulation Resistance: 500MΩ Min.
Contact Resistance: 100mΩ Max.
Dielectric Voltage: 500V AC for one minute
Mating Cycles: 5000 Insertions
Operation Condition: Temperature : -25°C to +85°C

Material
Housing: Hi-Temp Temperature, UL94V-0, Black
Terminal: Copper Alloy
Shell: Stainless steel
Spring: SWP

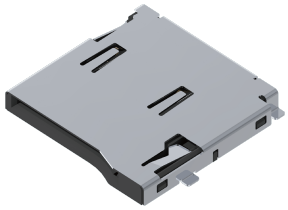

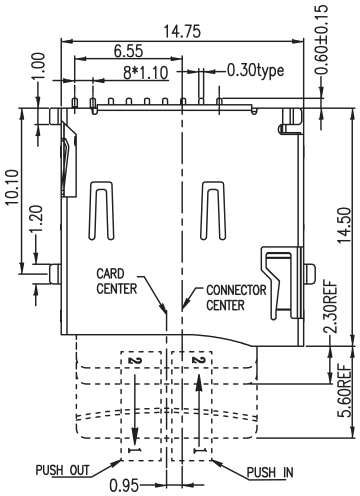

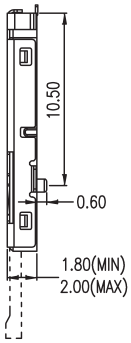

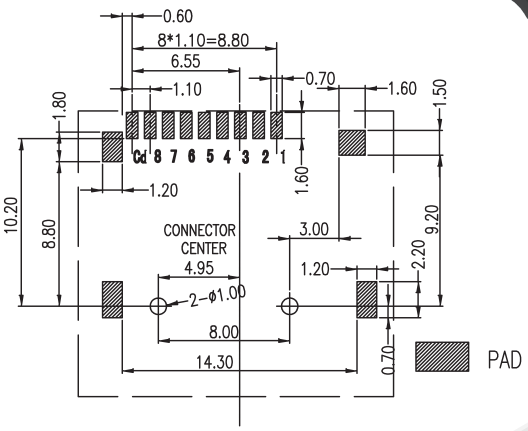

Recommended PCB Layout
(PCB TOLERANCE ±0.05)

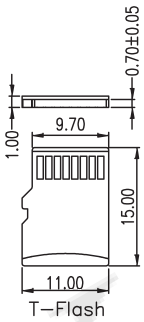

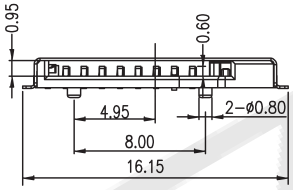

Pin No.	Name	YTPE	Description
1	DAT2	I/O/PP	Date Line (BIT2)
2	CD/DAT3	I/O/PP	Card Detect Date Lin (BIT3)
3	CMD	PP	Command Response
4	VDD	S	Supply Voltage
5	CLX	I	Clock
6	VSS	S	Supply Voltage Ground
7	DAT0	I/O/PP	Date Line (BIT0)
8	DAT1	I/O/PP	Date Line (DIT1)

P/N.:5KTFP-09S0PHL01

TF Card Holder Short Body Type 08+01P H=1.5

Specifications
Current Rating: 0.5 AMP
Rating Voltage: 30V AC
Insulation Resistance: 100MΩ Min.
Contact Resistance: 50mΩ Max.
Dielectric Voltage: 100V AC for one minute
Mating Cycles: 5000 Insertions
Operation Condition: Temperature :-30°C to +80°C

Material
Housing: Hi-Temp Temperature, UL94V-0, Black
Terminal: Copper Alloy
Shell: Stainless steel

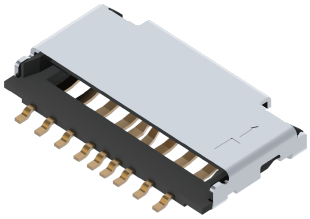

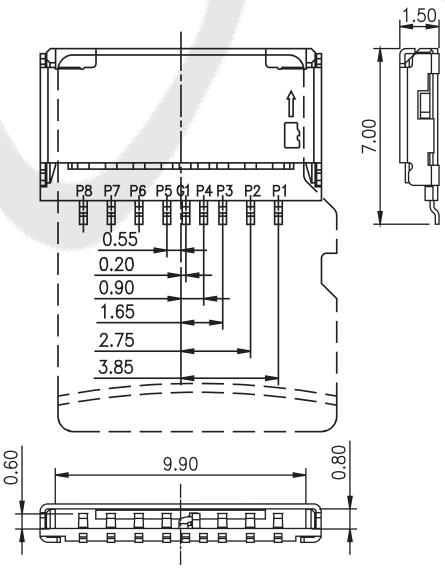

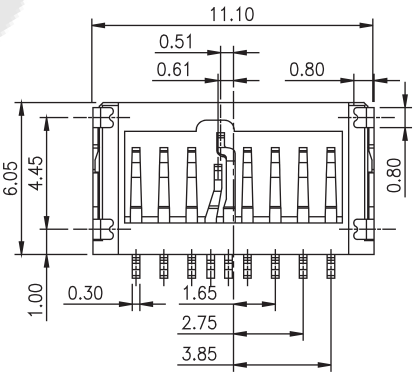

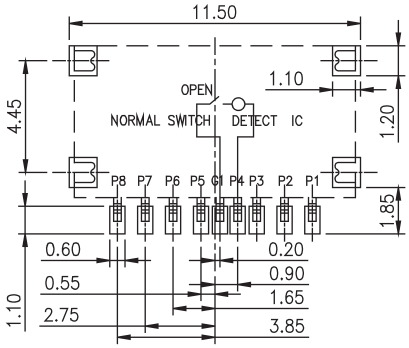

Recommended PCB Layout
(PCB TOLERANCE ±0.05)

Pin No.	Description
P1	DAT2
P2	CD/DAT3
P3	CMD
P4	VDD
P5	CLK
P6	VSS
P7	DAT0
P8	DAT1
G1	Switch

P/N.:5KTFS-09G0NHL01

Nano Sim Card Holder Push-Push Type 07P H=1.37

Specifications
Current Rating: 0.5 AMP
Insulation Resistance: 1000MΩ Min.
Contact Resistance: 100mΩ Max.
Dielectric Voltage: 500V AC for one minute
Operation Temperature: -20˚C to +60˚C
Durability: 3000 Cycles

Material
Insulator: LCP, UL 94V-0, Black
Contact Pin: Copper Alloy

SIM Pin Assignment	
Pin#	Name
C1	VCC
C2	RST
C3	CLK
C5	GND
C6	VPP
C7	I/O

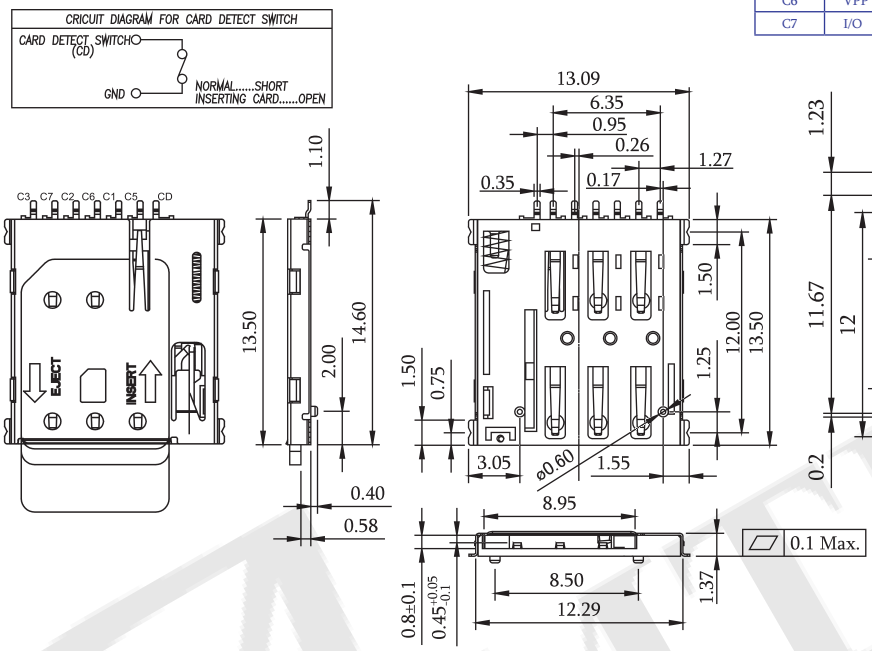

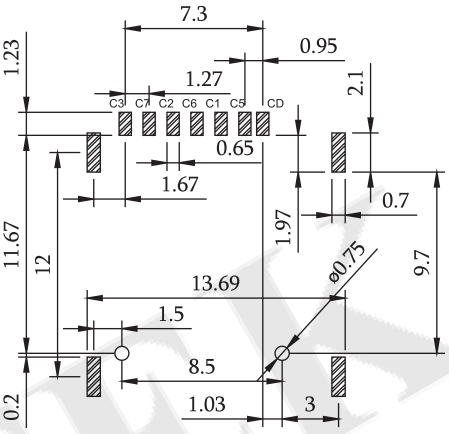

Recommended PCB Layout
(PCB TOLERANCE ±0.05)

P/N.:5KNSP-07S0PHE01

Nano Sim + Micro Sim Card Holder Push-Push Type 20P H=1.85

Specifications
Current Rating: 0.3 AMP
Rating Voltage: 5V AC
Insulation Resistance: 500MΩ Min.
Contact Resistance: 100mΩ Max.
Dielectric Voltage: 500V AC for one minute

Material
Housing: Hi-Temp Temperature, UL94V-0, Black
Terminal: Copper Alloy
Shell: Stainless steel

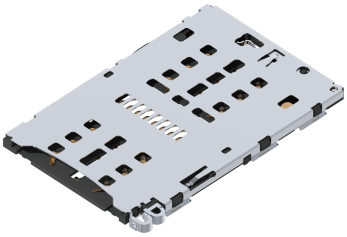

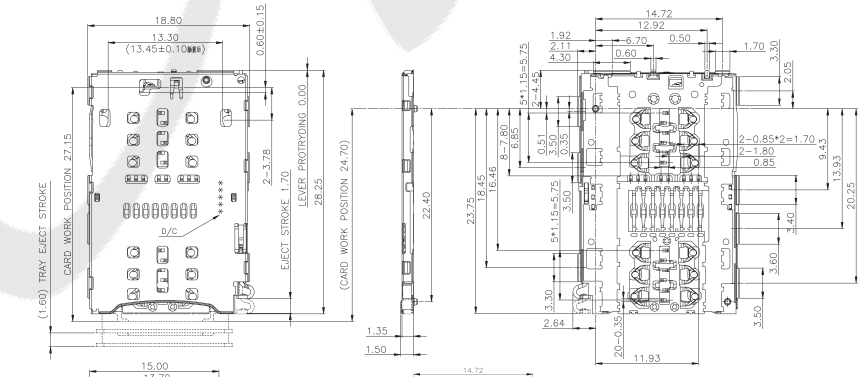

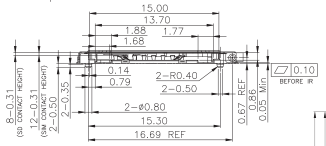

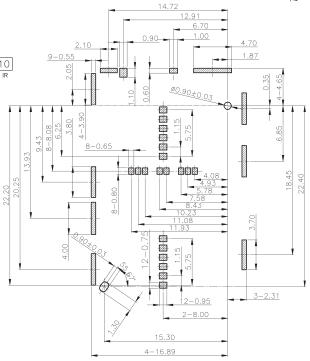

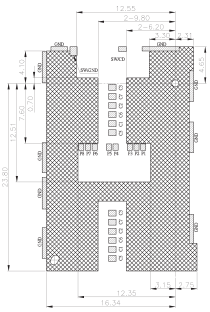

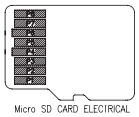

Micro SD CARD ELECTRICAL

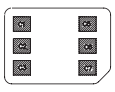

NANO SIM CARD ELECTRICAL

Recommended PCB Layout
(PCB TOLERANCE ±0.05)
Paste Board Thinkness 0.10mm.

Recommended PCB Layout
(No Patterns)
(PCB TOLERANCE ±0.05)

Connector/Card Pin Assignment			
ITEM	Fuction	ITEM	Fuction
Micro SD Card		NANO SIM Caed	
P1	DAT2 OF MSD	C1	VCC OF SIM
P2	CD/DAT3 OF MSD	C2	RST OF SIM
P3	CMD OF MSD	C3	CLK OF SIM
P4	VDD OF MSD	C5	GND OF SIM
P5	CLK OF MSD	C6	VPP OF SIM
P6	VSS OF MSD	C7	DATE OF SIM
P7	DAT0 OF MSD		
P8	DAT1 OF MSD		
Card Pin Assignment			
SW	Tray Detection SW		
S	Shell GND		

P/N.:5KNFS-20G0PHE01