I / O Connectors

5-25~5-34 • Battery Holder

AMTEK Technology Co., Ltd

Battery Holder Conn. Coin 1220 Type

Material
Insulator Material: PPS,UL 94V-0
Terminal: Copper Alloy
Plated: Gold Plated

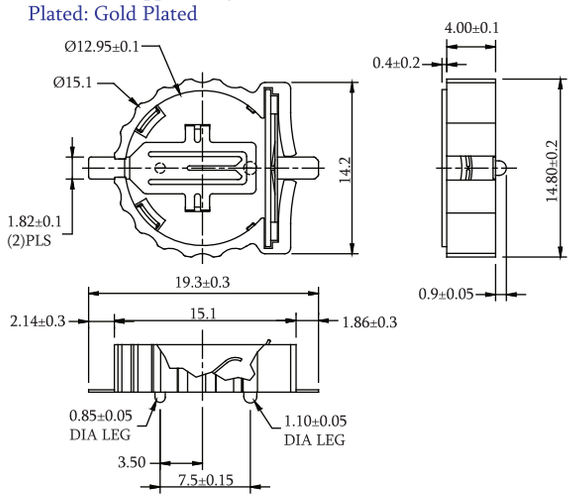

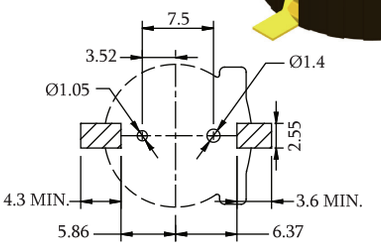

Recommended PCB Layout
(PCB TOLERANCE ±0.05)

P/N.:5SBD1220M0-G0NUH-A01
Old P/N:BTM-1220GNR-U

Material
Insulator Material: PBT,UL 94V-0
Contact Material: Copper Alloy
Finish: Tin Plated
For CR1220

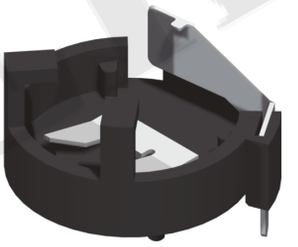

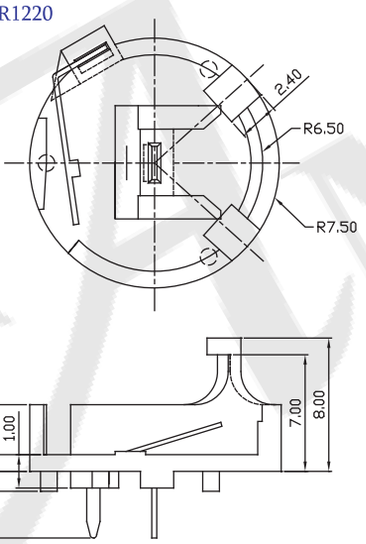

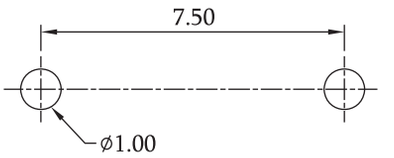

Recommended PCB Layout
(PCB TOLERANCE ±0.05)

P/N.:5SBD1220D0-T0BLB-A01
Old P/N:BTD-1250TB-L

Material
Insulator Material: PBT,UL 94V-0
Contact Material: Copper Alloy
Finish: Tin Plated
For CR1220

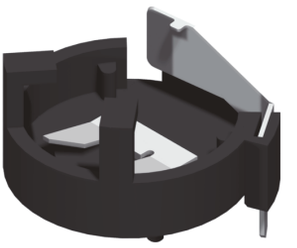

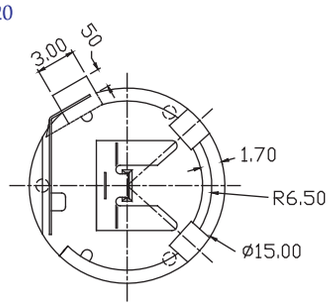

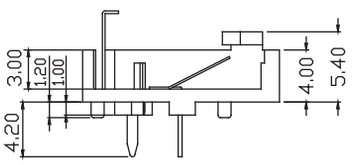

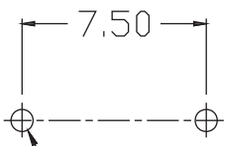

ø1.10(Drill Hole)
ø1.00(Punch Hole)

Recommended PCB Layout
(PCB TOLERANCE ±0.05)

P/N.:5SBD1220D0-T0BLB-A02

Battery Holder

RoHS

Battery Holder Conn. Coin 2032 Type

Material
Insulator Material: PBT,UL 94V-0
Terminal: Copper Alloy
Plated: Tin Plated
For CR2032

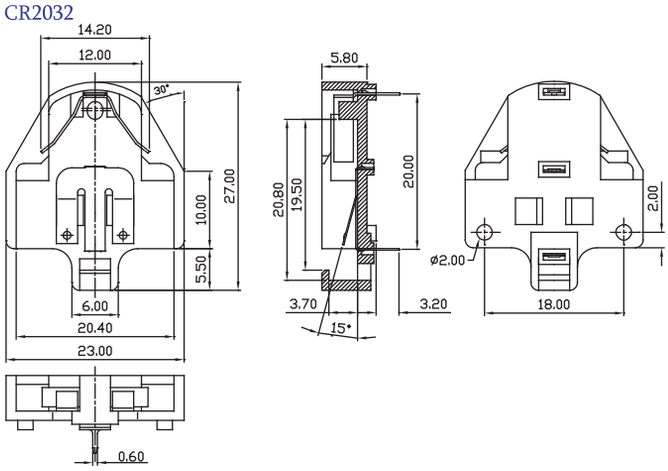

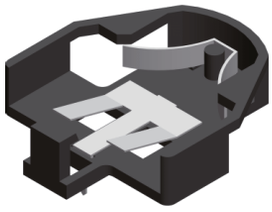

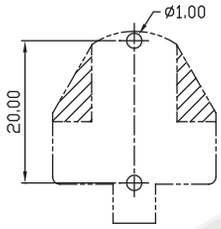

Recommended PCB Layout
(PCB TOLERANCE ±0.05)

P/N.:5SBD2032DB-T0BLA-B01
Old P/N:BTDA-2032TB-L

Specification
Current rating: 3Amp
Insulation Resistance: 500MΩ Min.
Contact Resistance: 20mΩ Max.
Operation Temperature: -40°C to +105°C

Material
Insulator Material: PBT,UL94V-0
Terminal: Phosphor Bronze
Plated: Tin Plated
For CR2032

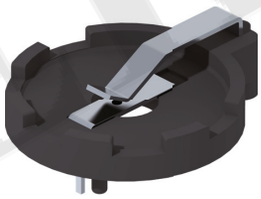

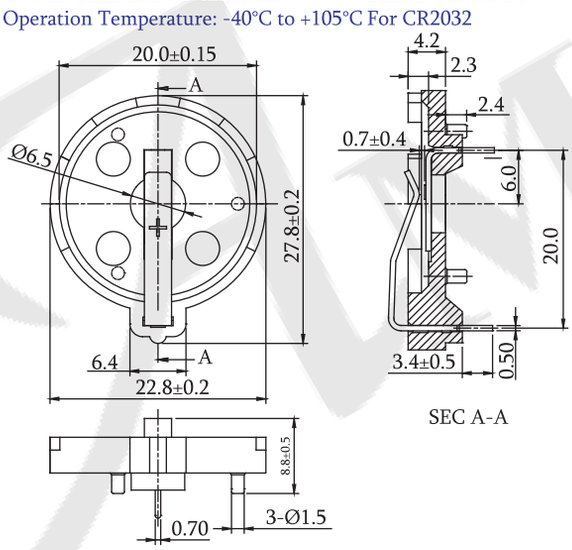

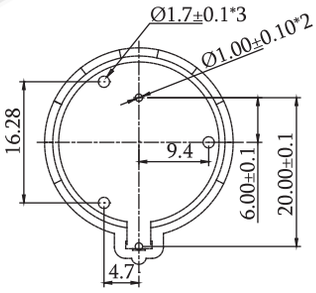

Recommended PCB Layout
(PCB TOLERANCE ±0.05)

P/N.:5SBD2032DC-T0BLA-A01
Old P/N:BTDB-2032TB-L

Specification
Contact resistance: 30mΩ Max
Insulation resistance: 1000MΩ Min
Operation Temperature: -55°C~-105°C
Dielectric Voltage: 500V
AC ONR SES LEVEL

Material
Housing: PA66,Black,RoHS
Contact: C2680
Plated: Tin Plated
For CR2032

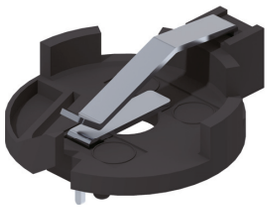

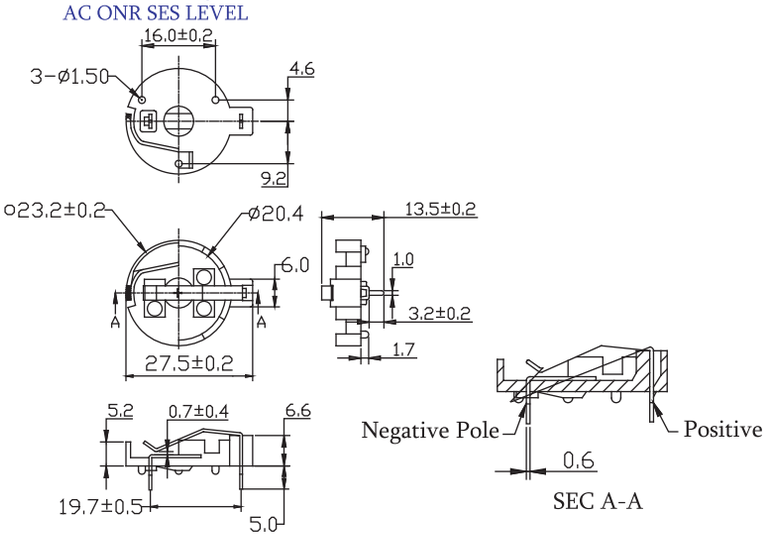

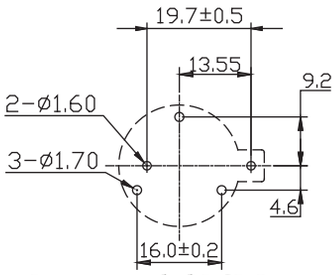

Recommended PCB Layout
(PCB TOLERANCE ±0.05)

P/N.:5SBD2032DC-T0BLA-A02
Old P/N:BTDD-2032TB-L

Battery Holder Conn. Coin 2032 Type

Specification
Contact Resistance: 30mΩ Max.
Insulation Resistance:1 000MΩ Min.
Dielectric Voltage: 500V for one minute
Operating Temperature: -55°C to +105°C

Material
Housing: PBT,UL94V-0
Contact: Brass
For CR2032

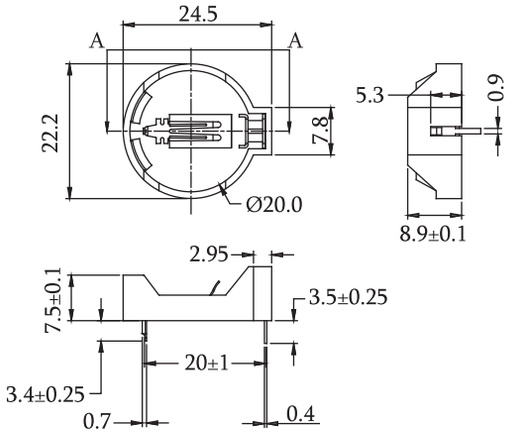

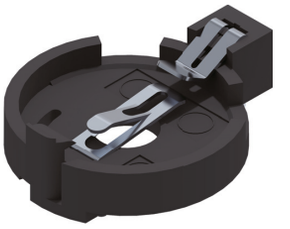

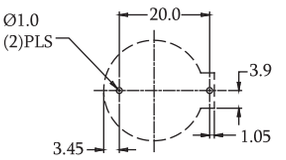

Recommended PCB Layout
(PCB TOLERANCE ±0.05)

P/N.:5SBD2032DD-T0BLX-A01
Old P/N:BTDC-2032TB-L

Specification
Contact resistance: 30mΩ Max
Insulation resistance: 1000MΩ Min
Operation Temperature: -55°C~-105°C
Dielectric Voltage: 500V
AC ONR SES LEVEL

Material
Housing: PA66,Black,RoHS
Contact: C2680
Plated: Tin Plated
For CR2032

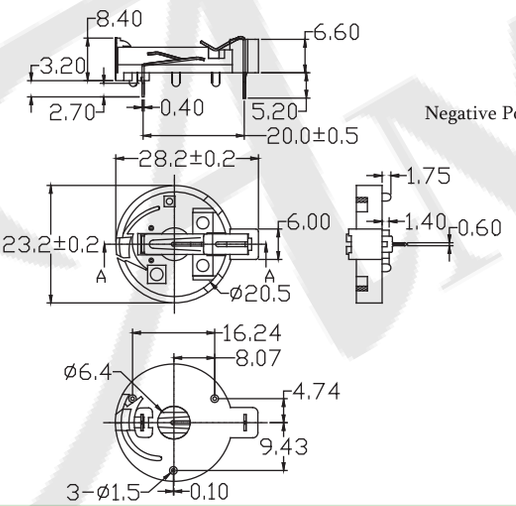

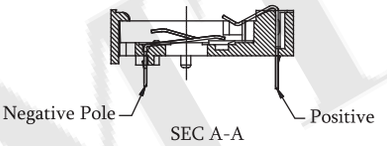

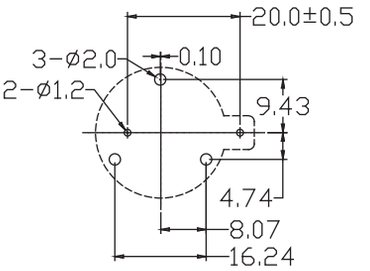

Recommended PCB Layout
(PCB TOLERANCE ±0.05)

P/N.:5SBD2032DE-T0BLX-A01

Specification
Contact resistance: 30mΩ Max
Insulation resistance: 1000MΩ Min
Operation Temperature: -55°C~-105°C
Dielectric Voltage: 500V
AC ONR SES LEVEL

Material
Housing: PA66,Black,RoHS
Contact: C2680
Plated: Tin Plated
For CR2032

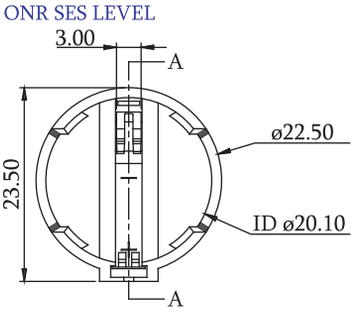

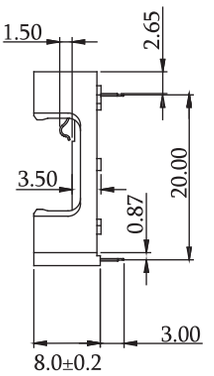

SEC A-A

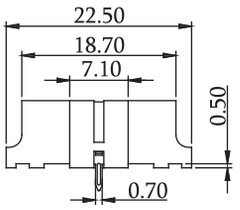

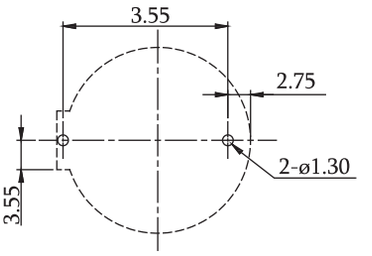

Recommended PCB Layout
(PCB TOLERANCE ±0.05)

P/N.:5SBD2032DF-T0BLA-A01
Old P/N:BTDE-2032TB-L

Battery Holder Conn. Coin 2032 Type

Material

Insulator Material: LCP+G.F, UL94V-0
Terminal: Phosphor Bronze T=0.15mm
Plated: Tin Plated
For CR2032

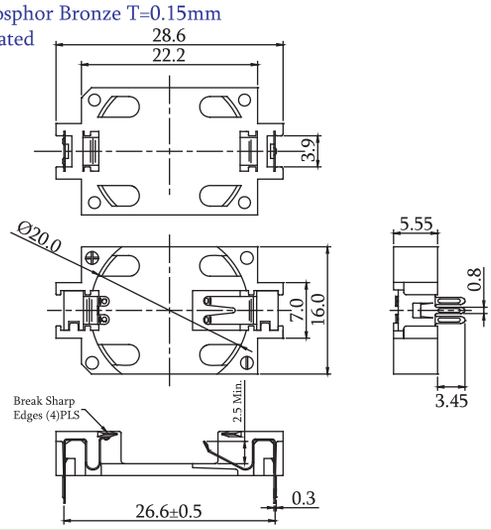

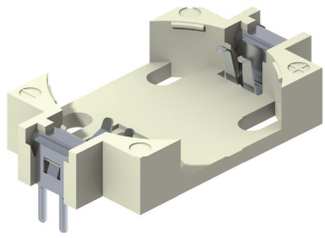

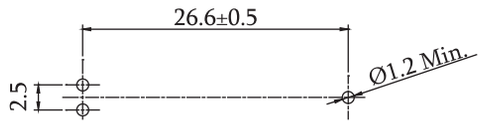

Recommended PCB Layout
(PCB TOLERANCE ±0.05)

P/N.:5SBD2032DA-T0WUA-A01

Material

Insulator Material:LCP,UL 94V-0
Terminal:Copper Alloy
Plated:Gold Plated
For CR2032

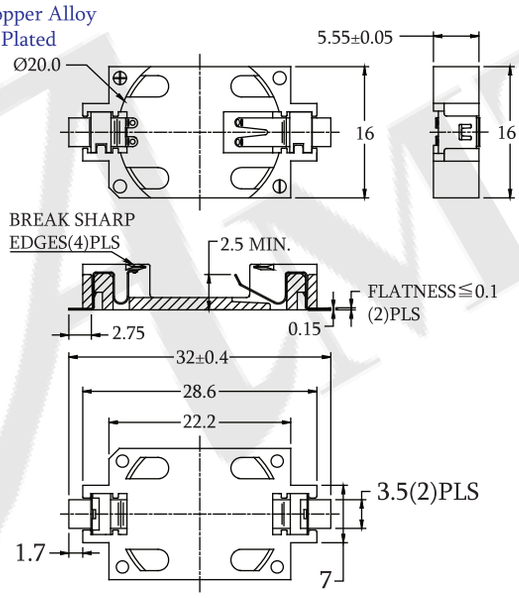

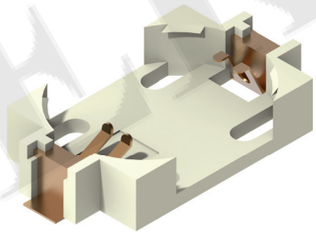

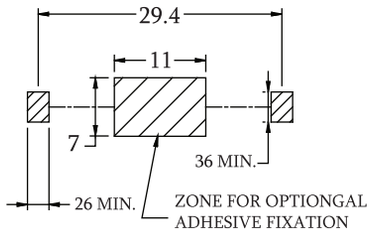

Recommended PCB Layout
(PCB TOLERANCE ±0.05)

P/N.:5SBD2032M1-G0WUR-A01

Old P/N:BTM-2032GWR-U

Material

Insulator Material:PPS + G.F,UL94V-0
Terminal:Phosphor Bronze,T=0.2mm
Plated:Gold Flash
For CR2032

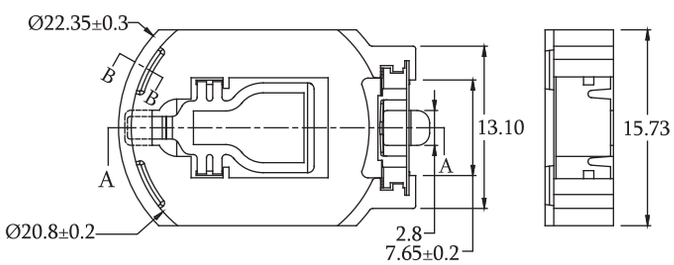

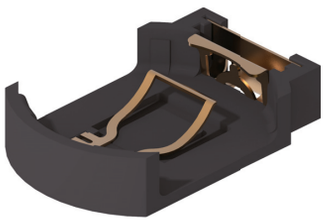

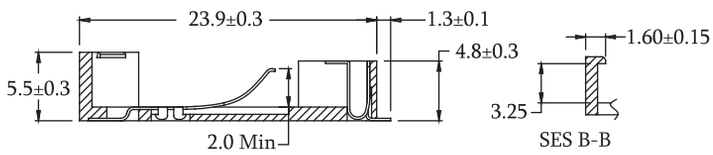

SES A-A

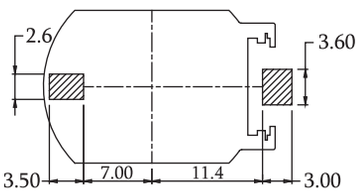

Recommended PCB Layout
(PCB TOLERANCE ±0.05)

P/N.:5SBD2032M2-G0NUX-A01

Old P/N:BTMA-2032GN-U

Battery Holder Conn. Coin 2032 Type

Material

Insulator Material:PA46,UL94V-0
Terminal:Brass C2680,T=0.25mm
Plated:Nickel Plated
For CR2032

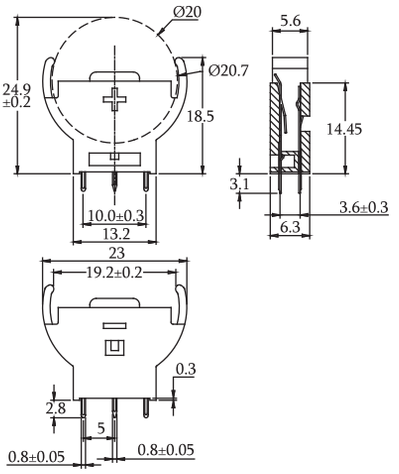

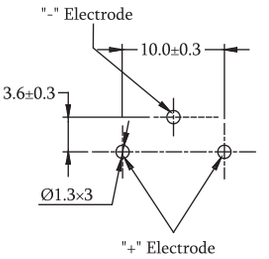

Recommended PCB Layout
(PCB TOLERANCE ±0.05)

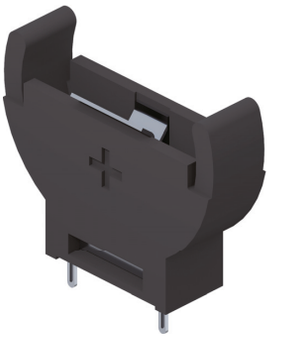

P/N.:5SBD2032UG-NIBUA-A01

Material

Insulator Material:Nylon 46+G.F,UL 94V-0
Terminal:Copper Alloy
Plated:Tin Plated
For CR2032

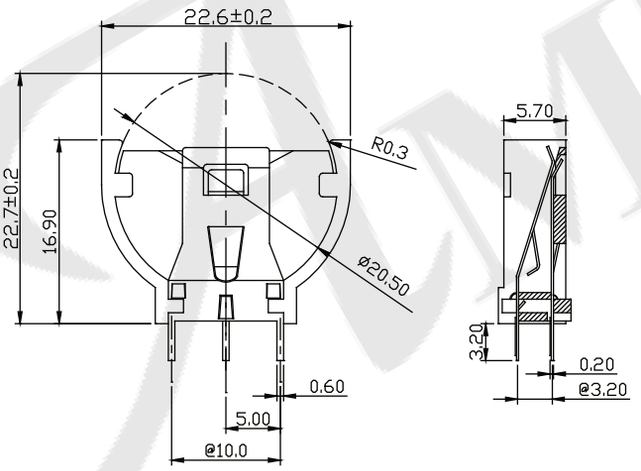

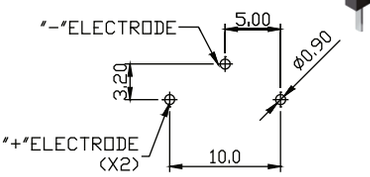

Recommended PCB Layout
(PCB TOLERANCE ±0.05)

P/N.:5SBD2032UH-T0BLA-A01

Old P/N:BTVA-2032TB-U

Battery Holder Conn. Coin 2330 Type

Material

Insulator Material: PBT,UL 94V-0
Contact Material: Copper Alloy
Finish: Nickel Plated
For CR2325

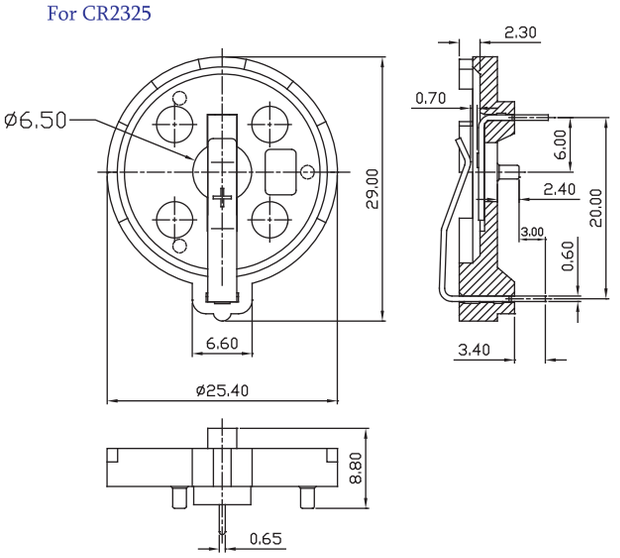

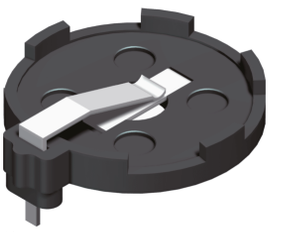

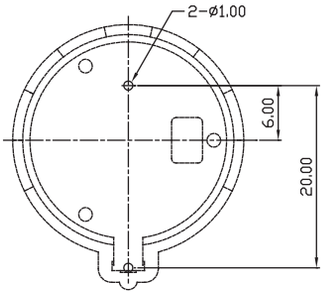

Recommended PCB Layout
(PCB TOLERANCE ±0.05)

P/N.:5SBD2330D0-NIBLB-A01

Old P/N:BTD-2325TB-L

Battery Holder Conn. Clips 2430 Type

Material

Material: 0.25mm Copper Alloy
Plated: Nickel Plated
For CR2430

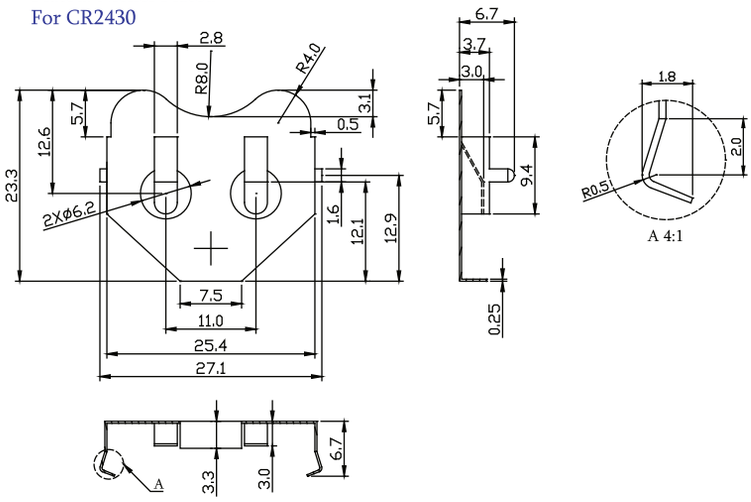

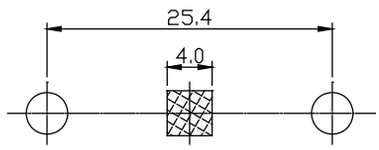

Recommended PCB Layout
(PCB TOLERANCE ±0.05)

P/N.:5SBK2430D0-NI00X-B01

Old P/N:BTMK-2430N-L

Battery Holder Conn. Coin 2450 Type

Material

Insulator Material: PBT,UL 94V-0
Contact Material: Copper Alloy
Finish: Tin Plated
For CR2450

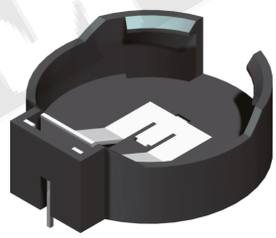

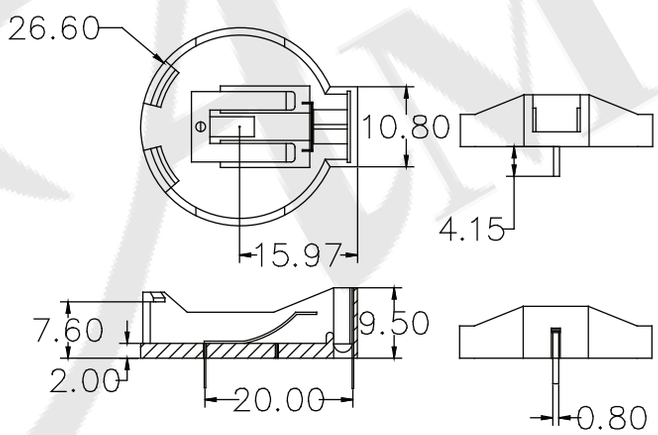

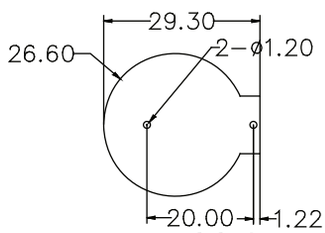

Recommended PCB Layout
(PCB TOLERANCE ±0.05)

P/N.:5SBD2450D0-T0BLX-A01

Old P/N:BTD-2450TB-L

Material

Housing: LCP+G.F. ,UL94V-0
Contact Pin: Phosphor Bronze, T=0.15mm
Plated: Gold Plated
For CR2450

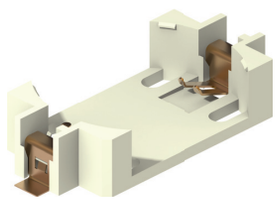

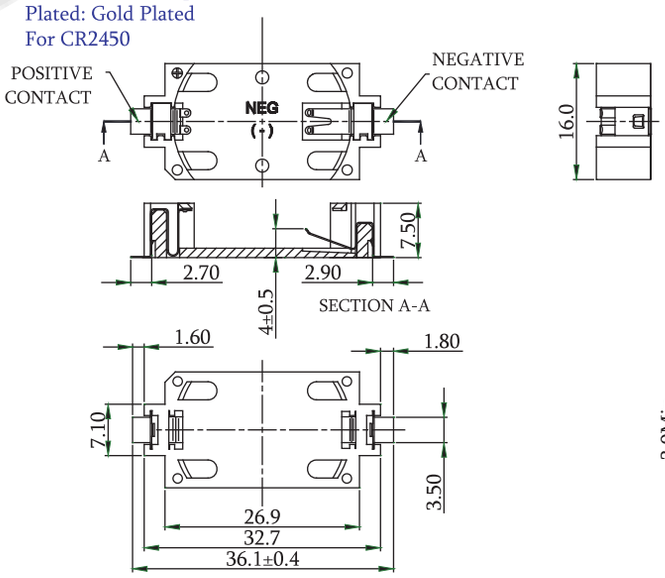

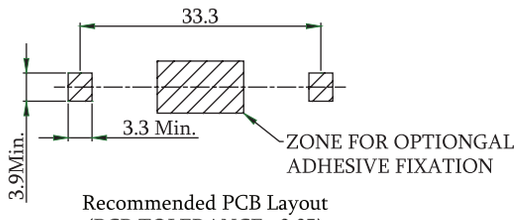

Recommended PCB Layout
(PCB TOLERANCE ±0.05)

P/N.:5SBD2450M0-G0WUA-A01

Battery Holder Conn. For AA Type

Material

Insulator Material:Poypropylene
Spring Material:Music Wire, 0.7DIA
Solded Lug Material:Brass
For AA×2

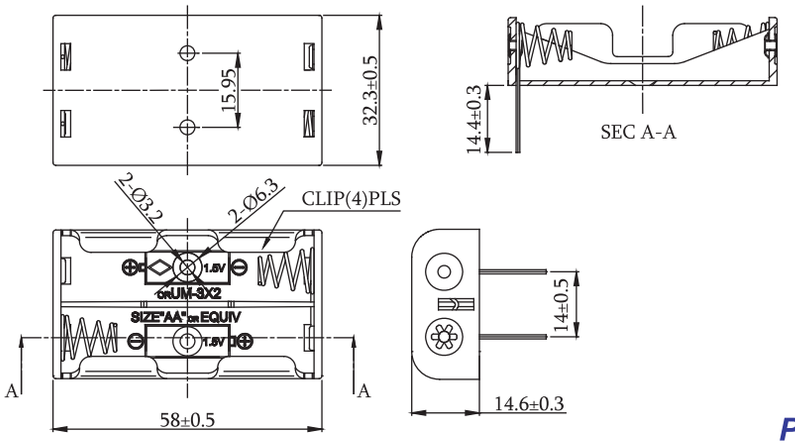

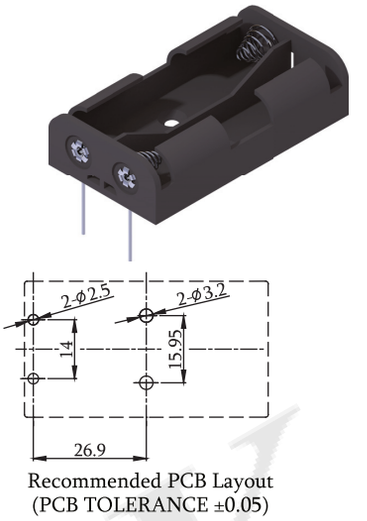

Recommended PCB Layout
(PCB TOLERANCE ±0.05)

P/N.:5SBD2A02D0-NIBLB-A01

Material

Insulator Material:Poypropylene
Spring Material:Music Wire, 0.7DIA
Wire:26 AWG,1007 UL/CSA Approved
For AA×3

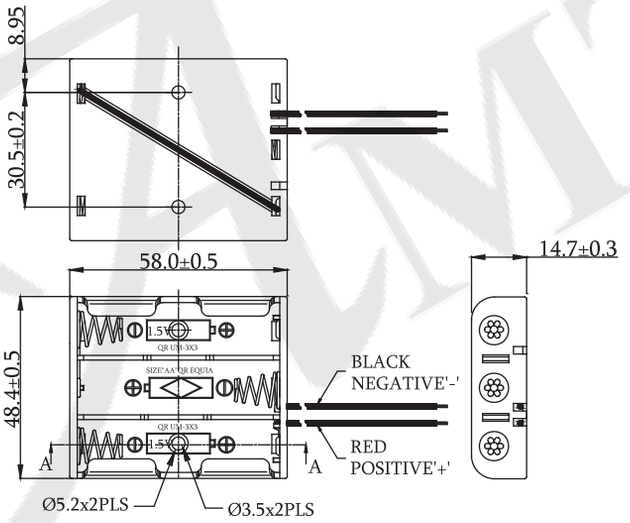

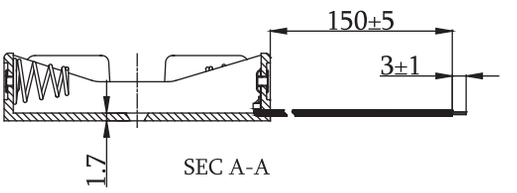

P/N.:5SBD2A03Y0-NIBLB-A01

Material

Insulator Material:Poypropylene
Spring Material:Music Wire, 0.7DIA
Wire:26 AWG,1007 UL/CSA Approved
For AA×4

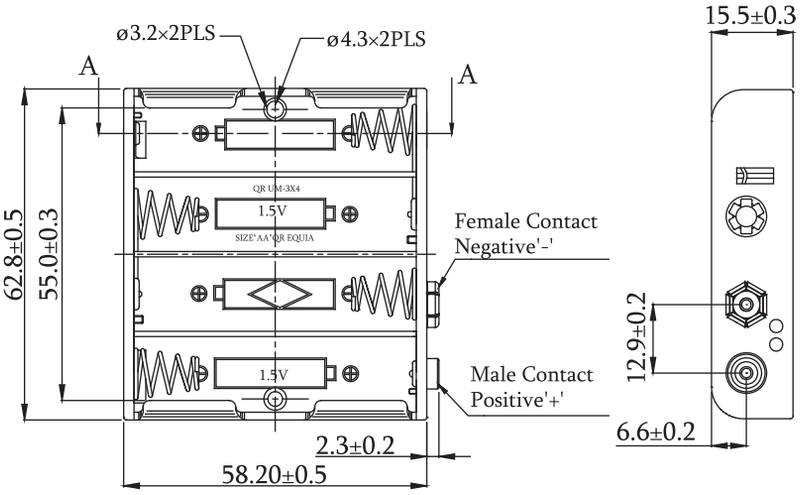

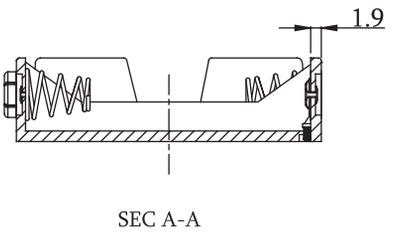

P/N.:5SBD2A04Y0-NIBLB-A01

Battery Holder Conn. For AAA Type

Material

Insulator: PA9T, UL94V-0, Black.
Contact Pin: 0.3 mm TH'S Stainless Steel.
Plating: Nickel 1 µm (Nickel weldable)
Package: Tray or Tape & Reel.

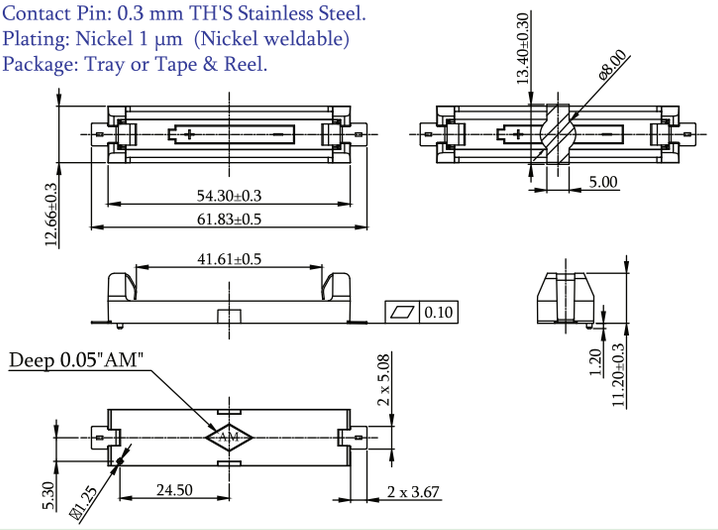

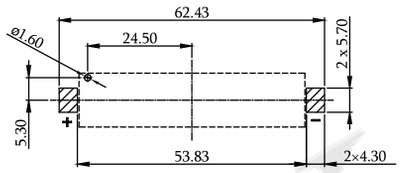

Recommended PCB Layout
(PCB TOLERANCE ±0.05)

P/N.:5SBD3A01M0-NIBUX-A01

Material

Insulator: PA9T, UL94V-0, Black.
Contact Pin: 0.3 mm TH'S Stainless Steel.
Plating: Nickel 1 µm (Nickel weldable)
Package: Tray or Tape & Reel With Cap

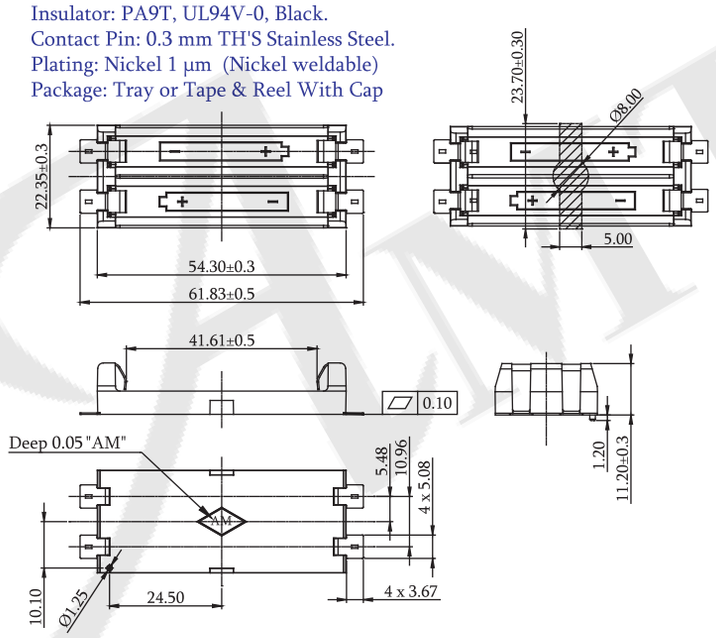

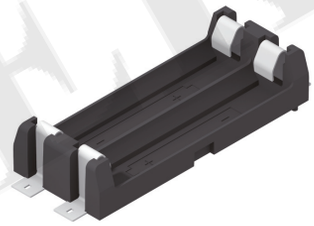

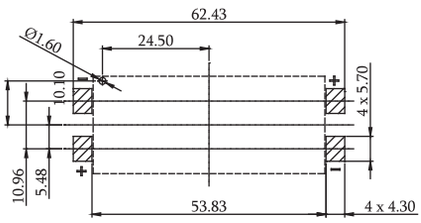

Recommended PCB Layout
(PCB TOLERANCE ±0.05)

P/N.:5SBD3A02M0-NIBUX-A01

Material

Insulator Material:A.B.S.,Black
Spring Material:Music Wire, 0.5DIA
Wire:26 AWG,1007 UL/CSA Approved
For AAA×2

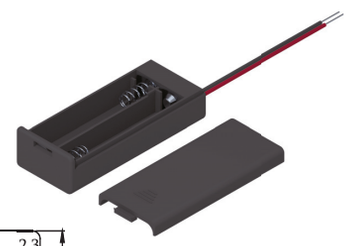

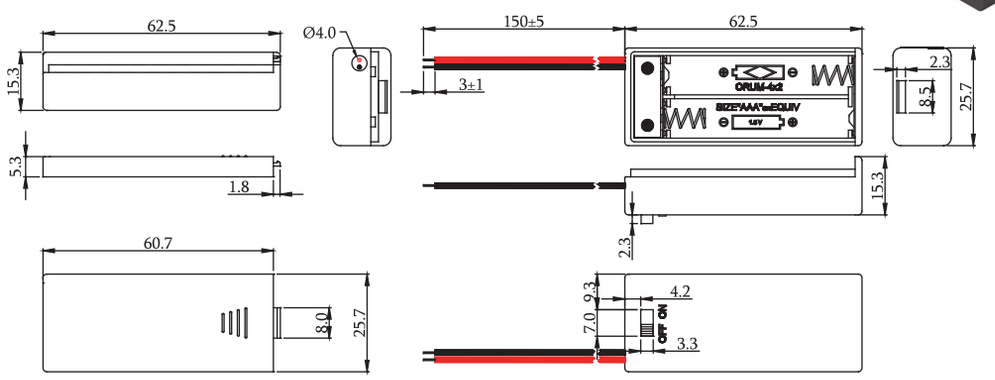

Cover Holder

P/N.:5SBD3A02Y0-NIBLB-A01