MATERIAL
HOUSING: NYLON66, UL94V-0
PIN:COPPER ALLOY,Sn PLATED
NUT:COPPER ALLOY,M2.5

MECHANICAL
OPERATING TEMPERATURE:-40°C~+105°C
SOLDERING TEMPERATURE:260°C/5S

TECHNICAL DATA
UL/CUL

SAFETY APPROVAL			
USE GROUP	B	C	D
RATED VOLTAGE (V)	300	-	300
RATED CURRENT (A)	15	-	10
WIRE RANGE SOLID/STRANDED (AWG)	-		
WITHSTANDING VOLTAGE	1600V (1MIN)		

IEC

SAFETY APPROVAL			
OVERVOLTAGE CATEGORY	III	III	II
CONTAMINATION CLASS	3	2	2
RATED VOLTAGE (V)	250	320	630
RATED CURRENT (A)	15	15	15
IMPULSE WITHSTANDING VOLTAGE (KV)	4.0	4.0	4.0
CONDUCTOR CROSS SECTION SOLID/FLEXIBLE (mm^2)	-		

ORDER INFORMATION
5 T P 5 0 8 R - 2 E G E X X X L X - 0 1

- 508: PITCH 5.08mm
- SERIES No.
- NO OF PINS TOTAL (02~24)
- G:GRAY, O:ORANGE, U:BLUE, R:RED, B:BLACK, T:TRANSPARENT, E:GREEN, N:BROWN, W:WHILE
- B:BAG

AMTEK糧德 2025.02.03 Released DCC

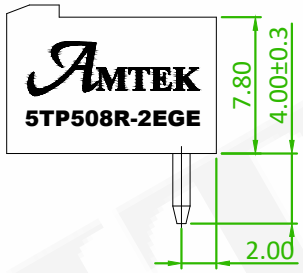

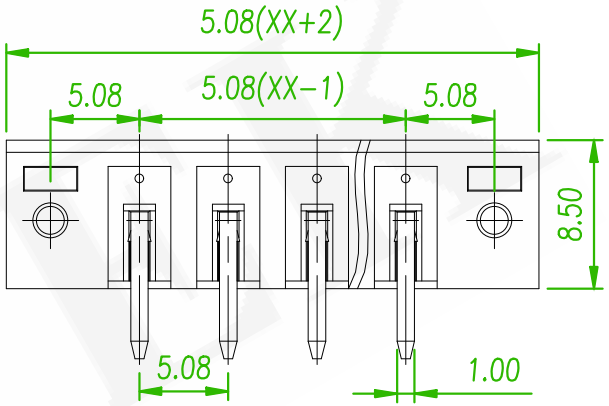

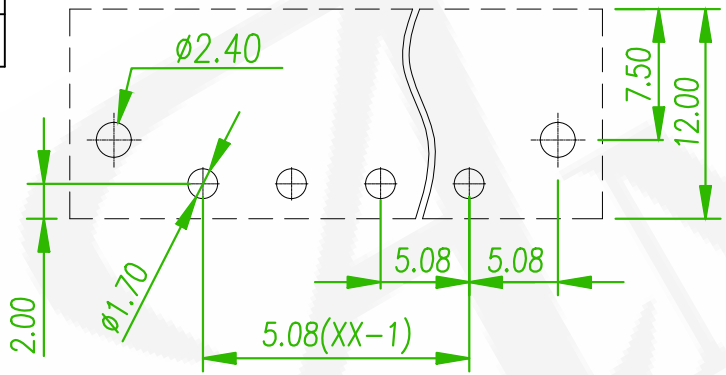

RECOMMENDED PCB LAOUT
(PCB TOLERANCE ±0.05)

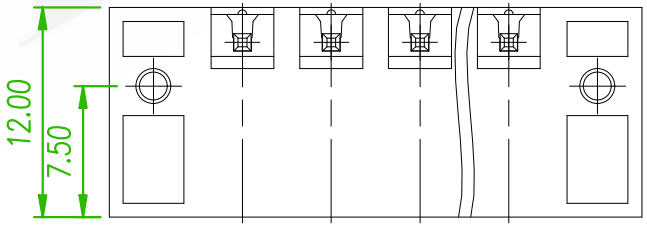

linear dimension(Tolerances Standard GB/T 14486-2008)								—	▱	⊥
variable range	to 6	over 6 to 10	over 10 to 30	over 30 to 60	over 60 to 100	over 100 to 160	over 160 to	to 10	over 10 to 100	over 100 to
tolerance	±0.20	±0.30	±0.50	±0.70	±1.00	±1.30	±1.60	0.10	0.30	0.60

REV.	ECN NO. OR DESCRIPTION	REVISED	DATE
G	2025020301 Add the Amtek Logo	Benson	2025/02/03
F	ECN NO.: 240348 Revise the drwing	Gaby	2024/11/08
E	ECN NO.: 230714 Revise the PART NO	Benson	2023/08/29

糧德精密有限公司
Amtek Technology Co., Ltd.
TEL: 886-2-2260-6878
FAX: 886-2-2260-8030

品名 TITLE	TERMINAL BLOCK PLUGGABLE 5.08mm DIP R/A TYPE			頁數 Page	1/1
品號 PART NO.	5TP508R-2EGEXXXLX-01			繪圖 DRAWN	Mia 2017/04/27
圖號 DRAWING NO.	GN011-MC386	版本 REV.	G	核對 CHECKED	Jonny 2017/04/27
客戶品號 CUSTOMER P/N		比例 SCALE	None	承認 APPROVED	Aaron 2017/04/27
公差 TOLERANCE		單位 UNIT	mm	THIRD ANGLE PROJECTION	