Electrical
TEMP. RANGE: -40°C ~ +105°C
SOLDERING TEMPERATURE: 260°C/5S

Material
HOUSING: PA66, UL94V-0
CONTACT: COPPER ALLOY,Sn PLATED
COVER: PA66, UL94V-0

ORDER INFORMATION

5 T P 5 0 0 S - 2 T C N X X X L X - 0 1

- 2TC: SERIES NO.
- XX: NO. OF POLES (02~24P)
- X: E:GREEN
- X: B:BAG / A:TRAY

TECHNICAL DATA D

UL/CUL

SAFETY APPROVAL			
USE GROUP	B	C	D
RATED VOLTAGE (V)	300	-	300
RATED CURRENT (A)	15	-	10
WIRE RANGE SOLID/STRANDED (AWG)	-		
WITHSTANDING VOLTAGE	1600V (1MIN)		

IEC I EC61984

OVERVOLTAGE CATEGARY	III	III	II
CONTAMINATION CLASS	3	2	2
RATED VOLTAGE (V)	250	320	400
RATED CURRENT (A)	10	10	10
IMPULSE WITHSTANDING VOLTAGE (KV)	4.0	4.0	4.0
CONDUCTOR CROSS SECTION SOLID/FLEXIBLE (mm^2)	-		

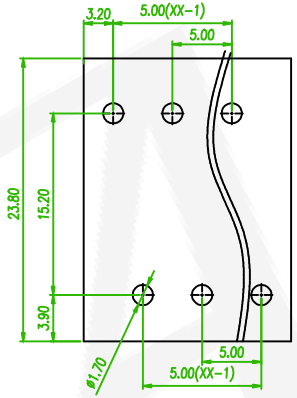

RECOMMENDED PCB LAYOUT
(PCB TOLERANCE ±0.05)

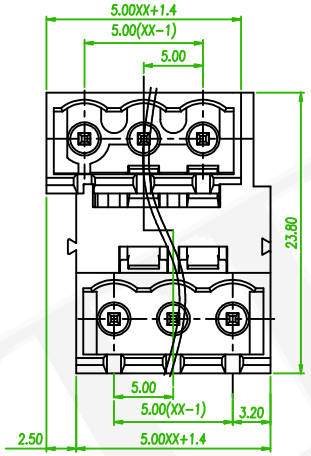

AMTEK糧德
2024.05.24
Released DCC

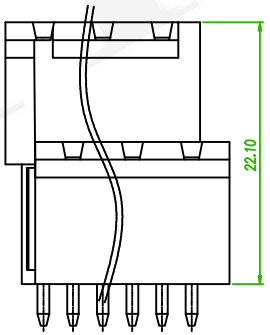

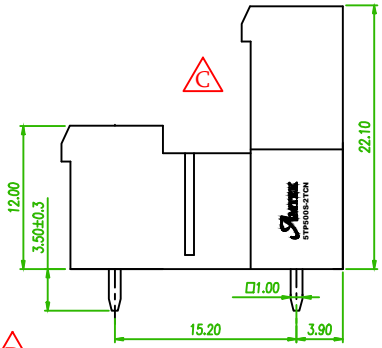

B

linear dimension(Tolerances Standard GB/T 14486-2008)								—	⏥	⊥
variable range	to 6	over 6 to 10	over 10 to 30	over 30 to 60	over 60 to 100	over 100 to 160	over 160 to	to 10	over 10 to 100	over 100 to
tolerance	±0.20	±0.30	±0.30	±0.50	±0.70	±1.00	±1.30	±1.60	0.10	0.30	0.60

REV.	ECN NO. OR DESCRIPTION	REVISED	DATE
D	QEC NO:240508 Revise the Drawing	Gaby	2024/05/20
C x1	ECN NO:210508 Revise the Drawing	Alice	2022/07/12
B x1	ECN NO:200718 Revise the Tolerance	Alice	2020/12/24

AMTEK
糧德精密有限公司
Amtek Technology Co., Ltd.
TEL: 886-2-2260-6878
FAX: 886-2-2260-8030

品名 TITLE	TERMINAL BLOCK PLUGGABLE 5.0mm DIP V/T TYPE			頁數 Page	1/1
品號 PART NO.	5TP500S-2TCNXXXLX-01			繪圖 DRAWN	David 2020/03/11
圖號 DRAWING NO.	GN011-DV881	版本 REV.	D	核對 CHECKED	Josh 2020/03/11
客戶品號 CUSTOMER P/N		比例 SCALE	None	承認 APPROVED	Josh 2020/03/11
公差 TOLERANCE		單位 UNIT	mm	THIRD ANGLE PROJECTION	