SPECIFICATION

OPERATING TEMPERATURE: -40°C~105°C
STRIPPING LENGTH: 9-10mm

MATERIAL

HOUSING: PA66, UL94V-0
COVER: PA66, UL94V-0
BUTTON: POM,UL94-HB
CLAMP: COPPER ALLOY,SN PLATED
SPRING: STAINLESS STEEL
SCREW: STEEL,M2.5,ZN PLATED

ORDER INFORMATION

5	T	P	5	0	0	N	-	G	D	F	E	X	X	X	L	X	-	0	1

- 500: PITCH5.00mm
- SERIES NO.
- NO OF PINS TOTAL(02-24)
- E:GREEN
- B:BAG

TECHNICAL DATA

UL/CUL

SAFETY APPROVAL			
USE GROUP	B	C	D
RATED VOLTAGE (V)	300	-	300
RATED CURRENT (A)	10	-	10
WITHSTANDING VOLTAGE	1600V (1MIN)		
WIRE RANGE SOLID/STRANDED [AWG]	28-12		

IEC IEC61984

OVERVOLTAGE CATEGARY	III	III	II
CONTAMINATION CLASS	3	2	2
RATED VOLTAGE (V)	320	320	630
RATED CURRENT (A)	12	12	12
IMPULSE WITHSTANDING VOLTAGE (KV)	4.0	4.0	4.0
CONDUCTOR CROSS SECTION SOLID/FLEXIBLE [mm²]	0.2-2.5		

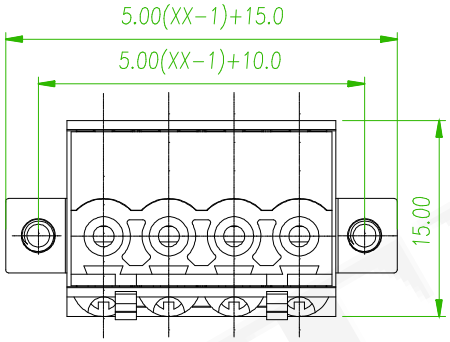

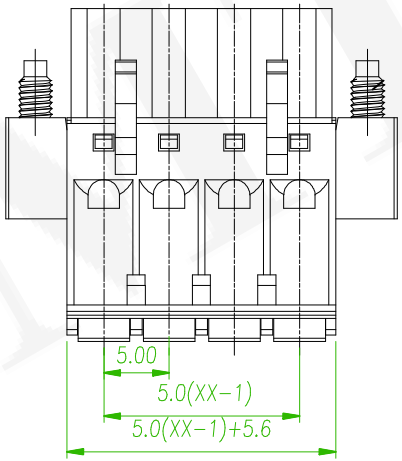

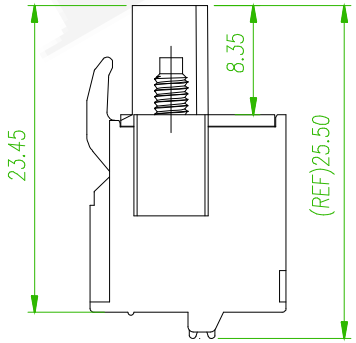

AMTEK糧德
2024.06.27
Released DCC

General Tolerances								—	▱	⊥
variable range	to 6	over 6 to 10	over 10 to 30	over 30 to 60	over 60 to 100	over 100 to 160	over 160 to	to 10	over 10 to 100	over 100 to
tolerance	±0.20	±0.30	±0.50	±0.70	±1.00	±1.30	±1.60	0.10	0.30	0.60

REV.	ECN NO. OR DESCRIPTION	REVISED	DATE
A	BPM NO.:202401240001	Randy	2024/06/18

AMTEK
糧德精密有限公司
Amtek Technology Co., Ltd.
TEL: 886-2-2260-6878
FAX: 886-2-2260-8030

品名 TITLE	TERMINAL BLOCK PLUGGABLE 5.00mm			頁數 Page	1/1
品號 PART NO.	5TP500N-GDFEXXXLX-01			繪圖 DRAWN	Randy 2024/06/18
圖號 DRAWING NO.	GN011-RD564	版本 REV.	A	核對 CHECKED	Josh 2024/06/18
客戶品號 CUSTOMER P/N		比例 SCALE	None	承認 APPROVED	Josh 2024/06/18
公差 TOLERANCE		單位 UNIT	mm	THIRD ANGLE PROJECTION	