MECHANICAL

TEMP.RANGE:-40°C~+105°C

SOLDERING TEMPERATURE: 260°C/5S

MATERIAL

HOUSING: PA66, UL94V-0

PIN: COPPER ALLOY ,Sn PLATED

ORDER INFORMATION

5	T	P	3	8	1	R	-	2	E	G	N	X	X	X	L	X	-	0	1

- 2EG: SERIES NO.
- XX: NO OF PINS TOTAL(02-24)
- X: E:GREEN
- X: B:BAG

TECHNICAL DATA

UL/CUL

SAFETY APPROVAL			
USE GROUP	B	C	D
RATED VOLTAGE (V)	300	-	300
RATED CURRENT (A)	8	-	8
WIRE RANGE SOLID/STRANDED (AWG)	-		
WITHSTANDING VOLTAGE	1600V (1MIN)		

IEC

OVERVOLTAGE CATEGARY	III	III	II
CONTAMINATION CLASS	3	2	2
RATED VOLTAGE (V)	160	160	250
RATED CURRENT (A)	7	7	7
IMPULSE WITHSTANDING VOLTAGE (KV)	2.5	2.5	2.5
CONDUCTOR CROSS SECTION SOLID/FLEXIBLE (mm^2)	-		

AMTEK糧德
2024.06.06
Released DCC

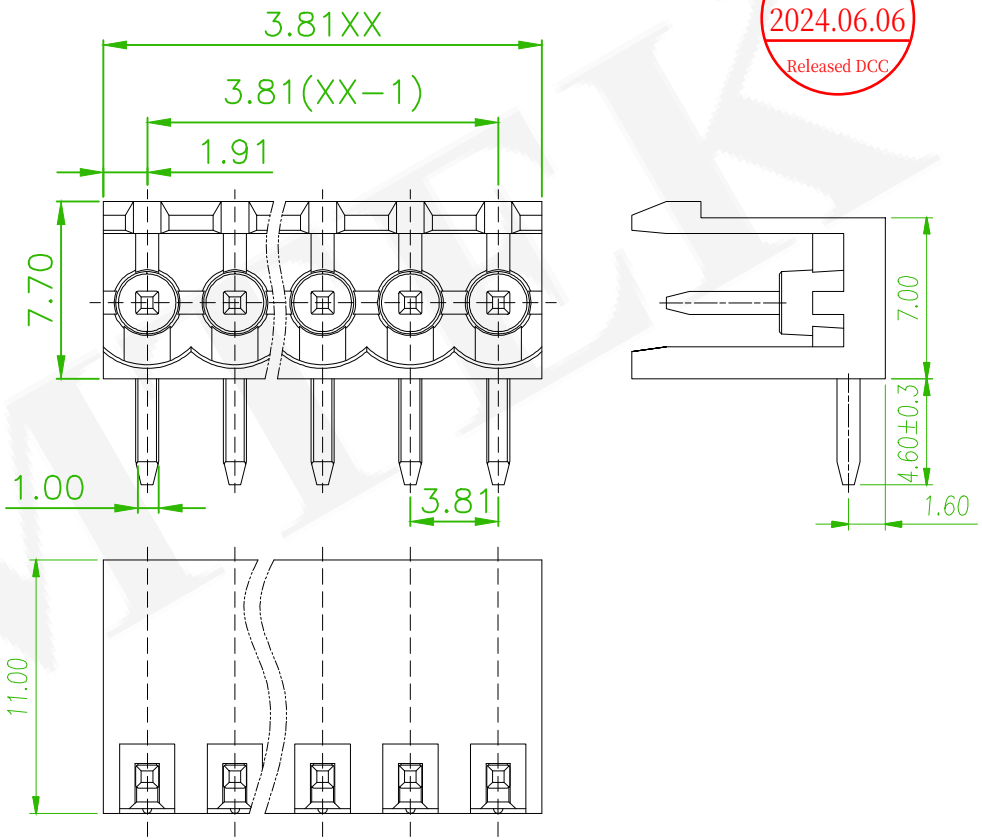

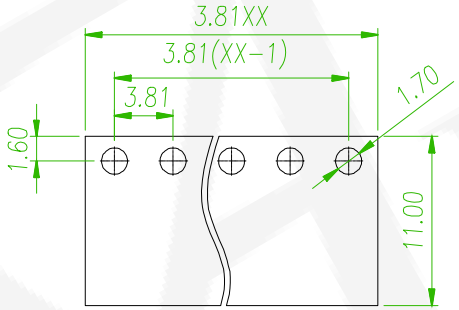

RECOMMENDED PCB LAYOUT
(PCB TOLERANCE ±0.05)

General Tolerances								—	⏥	⊥
variable range	to 6	over 6 to 10	over 10 to 30	over 30 to 60	over 60 to 100	over 100 to 160	over 160 to	to 10	over 10 to 100	over 100 to
tolerance	±0.20	±0.30	±0.50	±0.70	±1.00	±1.30	±1.60	0.10	0.30	0.60

REV.	ECN NO. OR DESCRIPTION	REVISED	DATE
A	BPM 202401240001	Gaby	2024/05/30

AMTEK
糧德精密有限公司
Amtek Technology Co., Ltd.
TEL: 886-2-2260-6878
FAX: 886-2-2260-8030

品名 TITLE	TERMINAL BLOCK PLUGGABLE 3.81mm DIP R/A TYPE			頁數 Page	1/1
品號 PART NO.	5TP381R-2EGNXXXLX-01			繪圖 DRAWN	Gaby 2024/05/30
圖號 DRAWING NO.	GN011-GY711	版本 REV.	A	核對 CHECKED	Josh 2024/05/30
客戶品號 CUSTOMER P/N		比例 SCALE	None	承認 APPROVED	Josh 2024/05/30
公差 TOLERANCE		單位 UNIT	mm	THIRD ANGLE PROJECTION	