MECHANICAL

OPERATING TEMPERATURE:-40°C~+130°C

SOLDERING TEMPERATURE: 260°C/5S

MATERIAL

HOUSING: LCP, UL94V-0

NUT: COPPER ALLOY,M2.5

PIN: COPPER ALLOY,Sn PLATED

TECHNICAL DATA

UL/CUL

SAFETY APPROVAL			
USE GROUP	B	C	D
RATED VOLTAGE (V)	300	-	-
RATED CURRENT (A)	8	-	-
WITHSTANDING VOLTAGE	1600V (1MIN)		

IEC

IEC61984

OVERVOLTAGE CATEGARY	III	III	II
CONTAMINATION CLASS	3	2	2
RATED VOLTAGE (V)	160	160	160
RATED CURRENT (A)	8	8	8
IMPULSE WITHSTANDING VOLTAGE (KV)	2.5	2.5	2.5

ORDER INFORMATION

5 T P 3 5 0 R - E H 3 E X X X U X - 0 1

- 350: PITCH3.50mm
- SERIES NO.
- NO OF POLES TOTAL (06-72)
- B:BLACK
- X:BOX

AMTEK糧德
2025.04.22
Released DCC

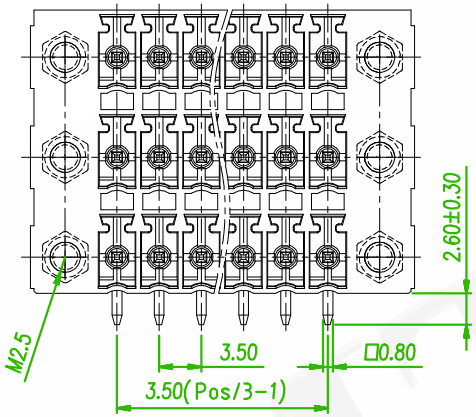

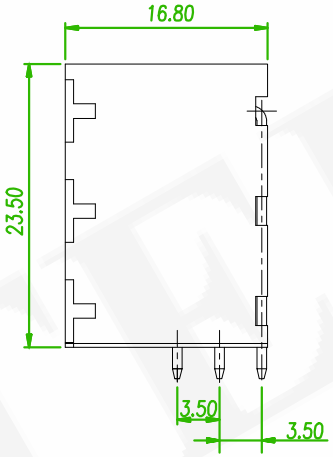

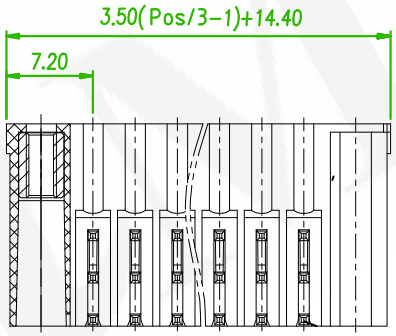

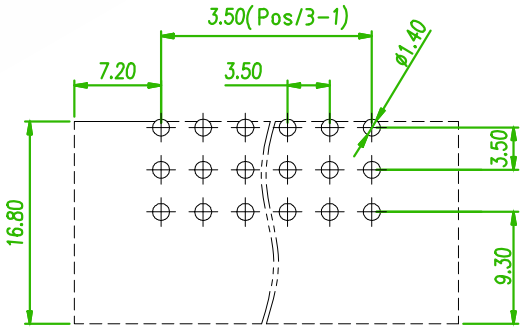

RECOMMENDED PCB LAYOUT
(PCB TOLERANCE ±0.05)

General Tolerances								—	▱	⊥
variable range	to 6	over 6 to 10	over 10 to 30	over 30 to 60	over 60 to 100	over 100 to 160	over 160 to	to 10	over 10 to 100	over 100 to
tolerance	±0.20	±0.30	±0.50	±0.70	±1.00	±1.30	±1.60	0.10	0.30	0.60

REV.	ECN NO. OR DESCRIPTION	REVISED	DATE
A	BPM NO.:202401240001	Randy	2024/06/18

糧德精密有限公司
Amtek Technology Co., Ltd.
TEL: 886-2-2260-6878
FAX: 886-2-2260-8030

品名 TITLE	TERMINAL BLOCK PLUGGABLE 3.50mm DIP R/A TYPE			頁數 Page	1/1
品號 PART NO.	5TP350R-EH3EXXXUX-01			繪圖 DRAWN	RANDY 2024/06/18
圖號 DRAWING NO.	GN011-RD561	版本 REV.	A	核對 CHECKED	JOSH 2024/06/18
客戶品號 CUSTOMER P/N		比例 SCALE	None	承認 APPROVED	JOSH 2024/06/18
公差 TOLERANCE		單位 UNIT	mm	THIRD ANGLE PROJECTION	