MATERIAL
HOUSING: NYLON66, UL94V-0
PIN:COPPER ALLOY,Sn PLATED

MECHANICAL
OPERATING TEMPERATURE:-40°C~+105°C

TECHNICAL DATA B

UL/CUL — UL1059

USE GROUP	B	C	D
RATED VOLTAGE (V)	300	-	300
RATED CURRENT (A)	8	-	8
WIRE RANGE SOLID/STRANDED (AWG)	-		
WITHSTANDING VOLTAGE	1600V (1MIN)		

IEC — IEC61984

OVERVOLTAGE CATEGORY	III	III	II
CONTAMINATION CLASS	3	2	2
RATED VOLTAGE (V)	160	160	250
RATED CURRENT (A)	7	7	7
IMPULSE WITHSTANDING VOLTAGE (KV)	2.5	2.5	2.5
CONDUCTOR CROSS SECTION SOLID/FLEXIBLE (mm^2)	-		

ORDER INFORMATION

5 T P 3 5 0 R - 5 E C E X X X L X - 0 1

- 350: PITCH 3.50mm
- SERIES No.
- No OF POLES TOTAL (02~24)
- E:GREEN
- B:BAG

AMTEK糧德
2025.02.19
Released DCC

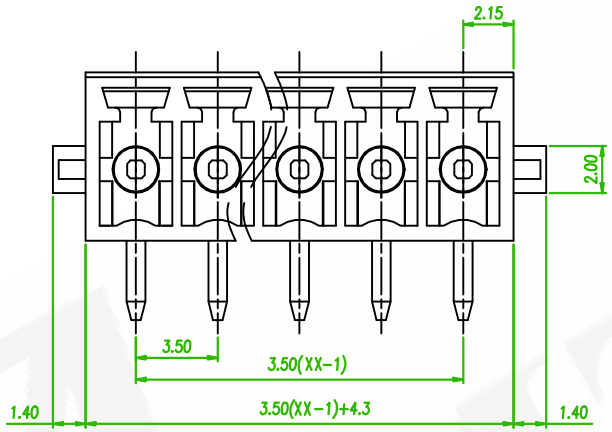

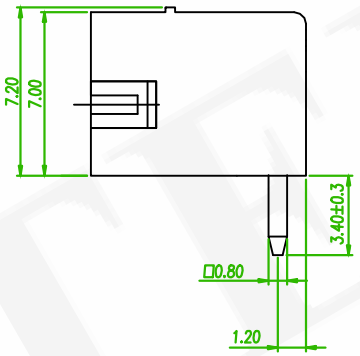

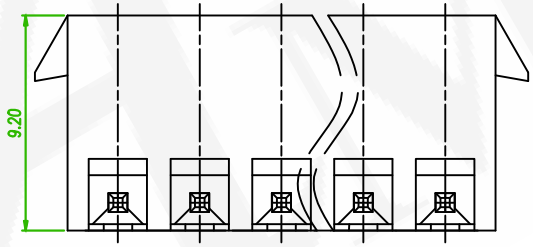

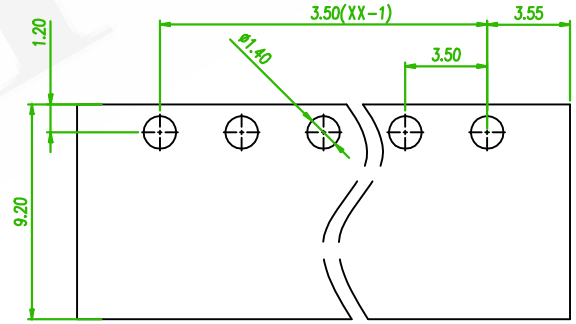

RECOMMENDED PCB LAOUT
(PCB TOLERANCE ±0.05)

linear dimension(Tolerances Standard GB/T 14486-2008)								—	▱	⊥
variable range	to 6	over 6 to 10	over 10 to 30	over 30 to 60	over 60 to 100	over 100 to 160	over 160 to	to 10	over 10 to 100	over 100 to
tolerance	±0.20	±0.30	±0.50	±0.70	±1.00	±1.30	±1.60	0.10	0.30	0.60

REV.	ECN NO. OR DESCRIPTION	REVISED	DATE
B	ECN NO.240348 Revise the drawing	Gaby	2025/01/23

AMTEK
糧德精密有限公司
Amtek Technology Co., Ltd.
TEL: 886-2-2260-6878
FAX: 886-2-2260-8030

品名 TITLE	TERMINAL BLOCK PLUGGABLE 3.50mm DIP R/A TYPE			頁數 Page	1/1
品號 PART NO.	5TP350R-5ECEXXXLX-01			繪圖 DRAWN	ALICE 2022/04/12
圖號 DRAWING NO.	GN011-AB182	版本 REV.	B	核對 CHECKED	JOSH 2022/04/12
客戶品號 CUSTOMER P/N		比例 SCALE	None	承認 APPROVED	JOSH 2022/04/12
公差 TOLERANCE		單位 UNIT	mm	THIRD ANGLE PROJECTION	