MATERIAL
HOUSING: NYLON66, UL94V-0
PIN HEADER:COPPER ALLOY,Sn PLATED

MECHANICAL
OPERATING TEMPERATURE:-40°C~+105°C
SOLDERING TEMPERATURE:260°C/5S

ORDER INFORMATION

5 T M 5 0 0 S - W 0 1 N X X X L X - 0 1

- 500 PITCH:5.00mm
- SERIES No.
- POLES (02-24P)
- G:GRAY
- A:TRAY / B:BAG

AMTEK糧德
2025.01.06
Released DCC

TECHNICAL DATA

UL/CUL

SAFETY APPROVAL			
USE GROUP	B	C	D
RATED VOLTAGE (V)	300	-	300
RATED CURRENT (A)	15	-	10
WIRE RANGE SOLID/STRANDED (AWG)	/		
WITHSTANDING VOLTAGE	1600V (1MIN)		

IEC IEC61984

OVERVOLTAGE CATEGORY	III	III	II
CONTAMINATION CLASS	3	2	2
RATED VOLTAGE (V)	320	320	630
RATED CURRENT (A)	12	12	12
IMPULSE WITHSTANDING VOLTAGE (KV)	4.0	4.0	4.0
CONDUCTOR CROSS SECTION SOLID/FLEXIBLE (mm^2)	/		

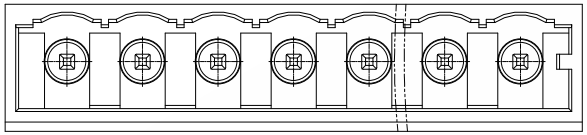

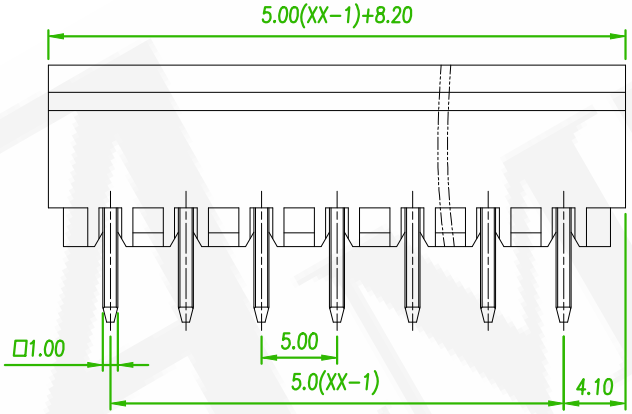

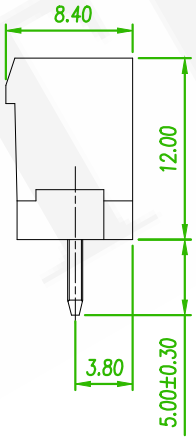

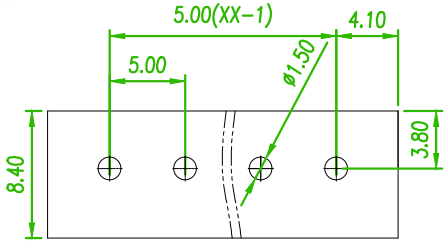

RECOMMENDED PCB LAOUT
(PCB TOLERANCE ±0.05)

linear dimension(Tolerances Standard GB/T 14486-2008)								—	▱	⊥
variable range	to 6	over 6 to 10	over 10 to 30	over 30 to 60	over 60 to 100	over 100 to 160	over 160 to	to 10	over 10 to 100	over 100 to
tolerance	±0.20	±0.30	±0.50	±0.70	±1.00	±1.30	±1.60	0.10	0.30	0.60

REV.	ECN NO. OR DESCRIPTION	REVISED	DATE
C	ECN NO:240348 Revise the drawing	Gaby	2024/11/26
B x1	ECN NO:200718 Revise the Tolerance	Alice	2020/10/30

糧德精密有限公司
Amtek Technology Co., Ltd.
TEL: 886-2-2260-6878
FAX: 886-2-2260-8030

品名 TITLE	TERMINAL BLOCK MCS 5.00mm DIP V/T TYPE			頁數 Page	1/1
品號 PART NO.	5TM500S-W01NXXXLX-01			繪圖 DRAWN	ERIC 2019/01/03
圖號 DRAWING NO.	GN011-EA441	版本 REV.	C	核對 CHECKED	JOSH 2019/01/03
客戶品號 CUSTOMER P/N		比例 SCALE	None	承認 APPROVED	JASON 2019/01/03
公差 TOLERANCE		單位 UNIT	mm	THIRD ANGLE PROJECTION	