AMTEK糧德
2024.12.27
Released DCC

ORDER INFORMATION

5 T B 1 1 0 R - 6 5 R E X X X L X - W 1

- 110 PITCG 11.0mm
- SERIES No.
- POLES (02-24P)
- B:BLACK
- A:TRAY / B:BAG

ELECTRICAL B E

STANDARD: UL
RATED VOLTAGE: 300V
RATED CURRENT: 20A
CONTACT RESISTANCE: 20mΩ
WITHSTANDING VOLTAGE: AC 1600V FOR ONE MIN
INSULATION RESISTANCE: 500MΩ/DC500V
WIRE RANGE: 22-12AWG

MECHANICAL

TEMP. RANGE: -40°C ~ +105°C
TORQUE: 1.2Nm
MAX SOLDERING: +260°C,FOR 5 SEC

MATERIAL

HOUSING:NYLON66, UL94V-0
SCREWS:STEEL,M4 STEEL Ni PLATED
PIN HEADER: COPPER ALLOY, Sn PLATED

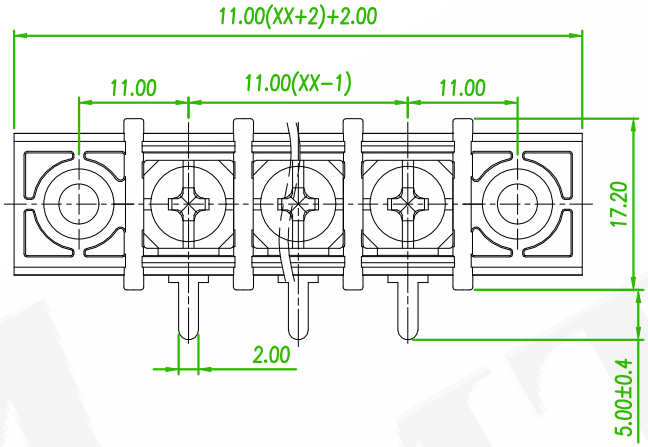

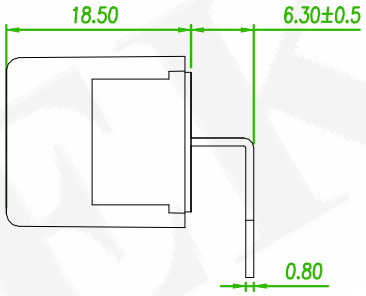

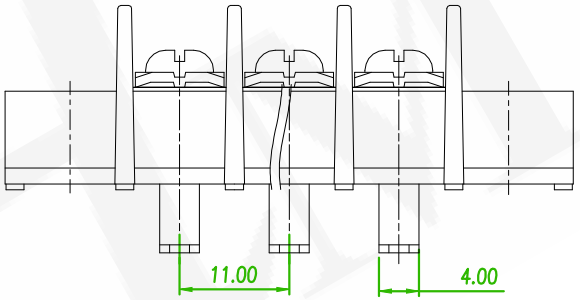

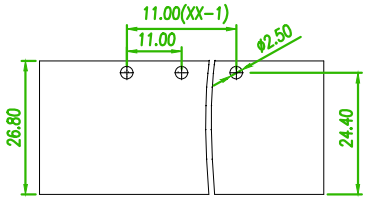

RECOMMENDED PCB LAOUT
(PCB TOLERANCE ±0.05)

C

linear dimension(Tolerances Standard GB/T 14486-2008)								—	▱	⊥
variable range	to 6	over 6 to 10	over 10 to 30	over 30 to 60	over 60 to 100	over 100 to 160	over 160 to	to 10	over 10 to 100	over 100 to
tolerance	±0.20	±0.30	±0.50	±0.70	±1.00	±1.30	±1.60	0.10	0.30	0.60

REV.	ECN NO. OR DESCRIPTION	REVISED	DATE
E	ECN NO:240348 Revise the drawing	Gaby	2024/12/05
D x2	ECN NO:201211 Revise the PART NO.	Alice	2020/12/31
C x1	ECN NO:200718 Revise the Tolerance	Alice	2020/11/09

糧德精密有限公司
Amtek Technology Co., Ltd.
TEL: 886-2-2260-6878
FAX: 886-2-2260-8030

品名 TITLE	TERMINAL BLOCK BARRIER 11.0mm DIP R/A TYPE			頁數 Page	1/1
品號 PART NO.	5TB110R-65REXXXLX-W1			繪圖 DRAWN	Eric 2019/01/10
圖號 DRAWING NO.	GN011-EA532	版本 REV.	E	核對 CHECKED	Josh 2019/01/10
客戶品號 CUSTOMER P/N		比例 SCALE	None	承認 APPROVED	Jason 2019/01/10
公差 TOLERANCE		單位 UNIT	mm	THIRD ANGLE PROJECTION	