SPECIFICATIONS B

DIELECTRIC STRENGTH: AC110V 50Hz/1MIN
RATING:DC12V,0.1A MAX
CONTACT RESISTANCE:100mΩ MAX
INSULATION RESISTANCE:100MΩ MIN
OPERATING LIFE:10,000 CYCLES
OPERATING FORCE:100gf±50gf OR 200gf±50gf
TRAVEL:0.85±0.2mm
OPERATING TEMPERATURE:-30°C~+85°C

MATERIALS

BASE:NYLON 46,BLACK
CONTACT:PHOSPHOR BRONZE
COVER:STAINLESS STEEL
ACTUATOR:NYLON 46
SPRING:STAINLESS STEEL

ORDER INFORMATION

6 S L M R 0 2 - X X X X X X X X X F 0 1

- X X X: 113:11.3mm
- X X X X X: 100:100gf±50gf / 200:200gf±50gf
- X: B:BLACK
- X: P:WITH PEG W/O GROUND WITH SHELL
- X: H: T/R W/O CAP

AMTEK糧德
2025.11.12
Released DCC

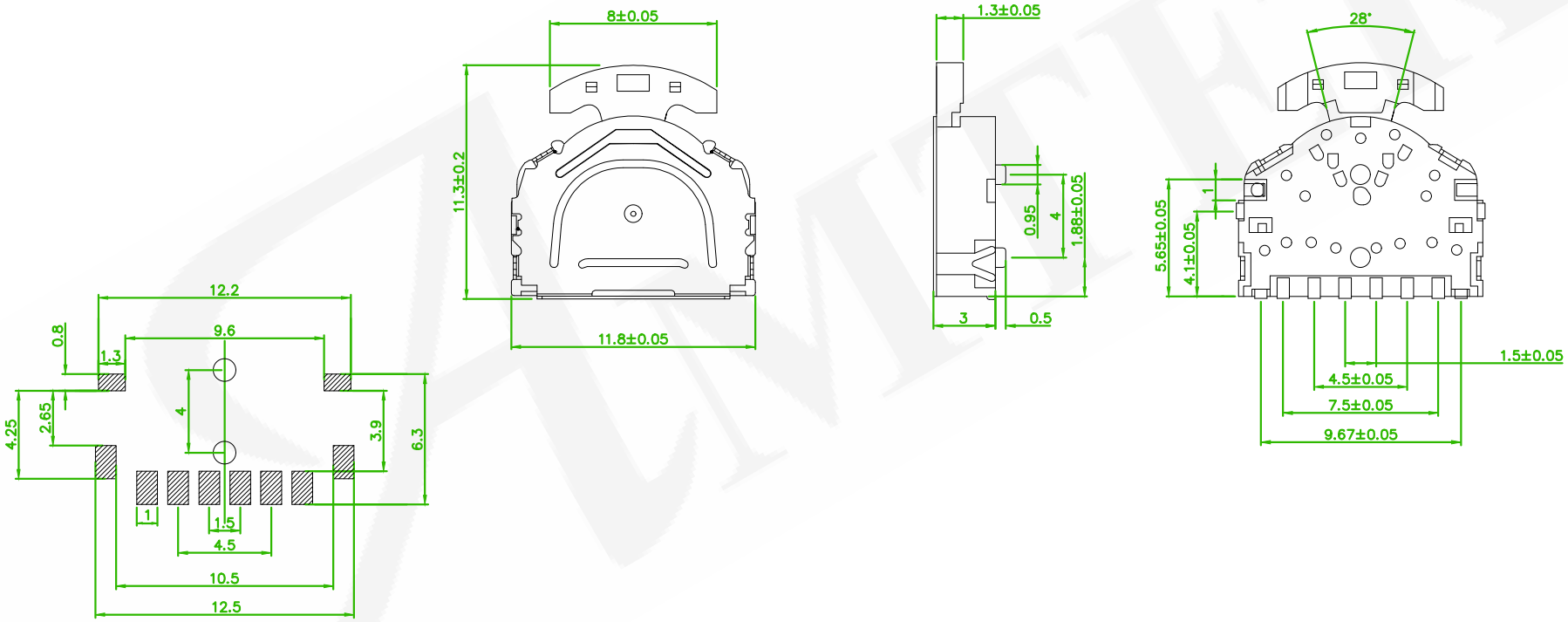

RECOMMENDED PCB LAYOUT
(PCB TOLERANCE ±0.05)

REV.	ECN NO. OR DESCRIPTION	REVISED	DATE
C	RECN2511000029	Oliver	2025/11/07
B	RECN2507000063	Willy	2025/07/10
A	BPM 20250307003	John	2025/05/13

AMTEK
糧德精密有限公司
Amtek Technology Co., Ltd.
TEL: 886-2-2260-6878
FAX: 886-2-2260-8030

品名 TITLE	LEVER & PUSH SWITCH SMT R/A TYPE			頁數 Page	1/1
品號 PART NO.	6SLMR02-XXXXXXXXXF01			繪圖 DRAWN	JOHN 2025/06/10
圖號 DRAWING NO.	GN219-JH352	版本 REV.	C	核對 CHECKED	JOSH 2025/06/10
客戶品號 CUSTOMER P/N		比例 SCALE	None	承認 APPROVED	JOSH 2025/06/10
公差 TOLERANCE	.X ± 0.2 .XX± 0.1	單位 UNIT	mm	THIRD ANGLE PROJECTION	