ORDER INFORMATION

5	T	2	0	0	1	N	-	X	X	X	X	A	0	1

- PITCH 2.00mm
- P:PHOSPHOR BRONZE
- G0:GOLD FLASH / T0:TIN PLATED
- R:TAPE&REEL

AMTEK糧德
2025.11.27
Released DCC

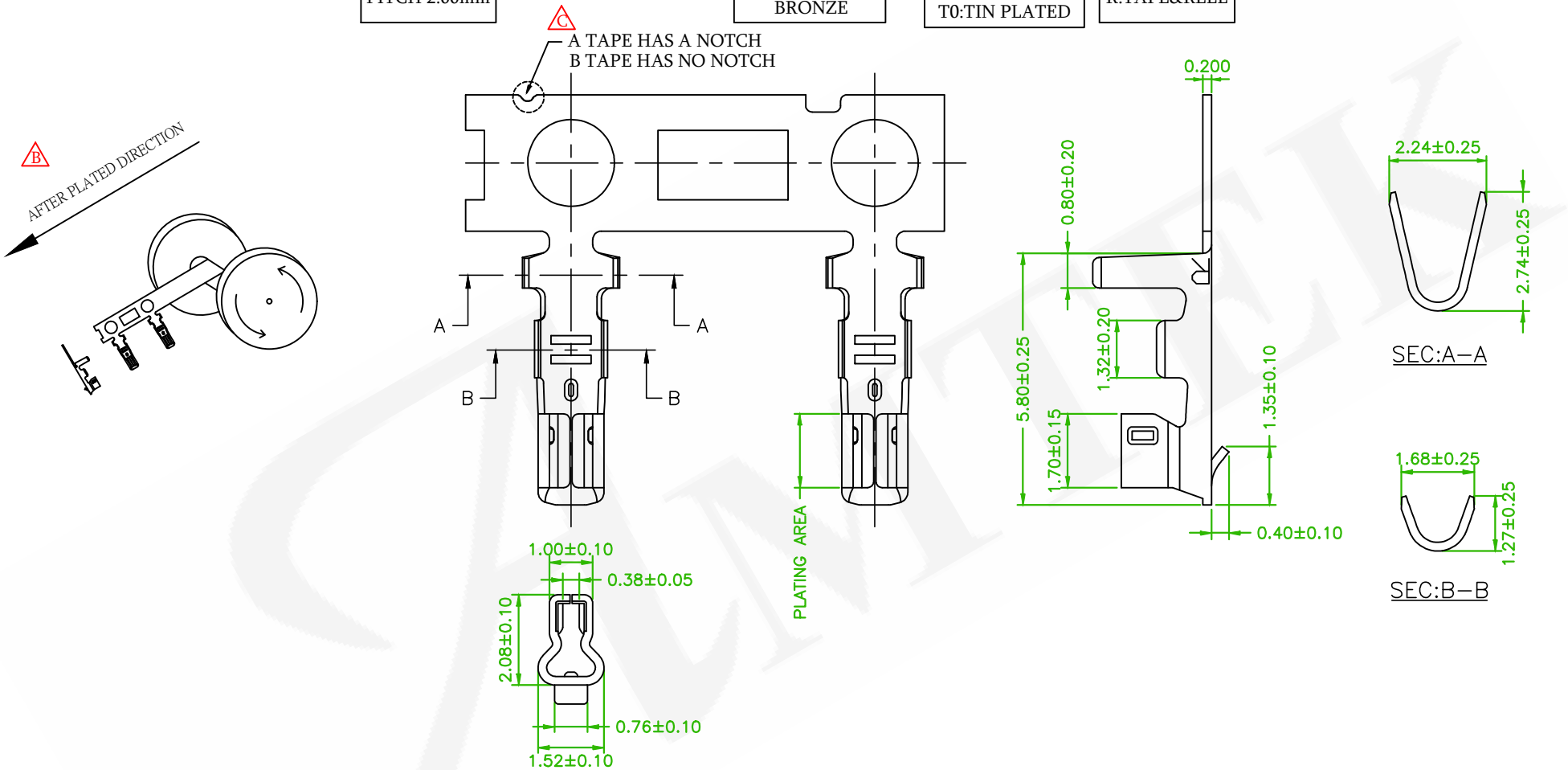

OLD PART NO. : 2001-TXP-L

PART NO	WIRE RANGE	INSULATION O.D.	MATERIAL	FINISH	QTY/REEL
5T2001N-PT0RA01	AWG#24-#30	1.50mm(MAX)	PHOSPHOR BRONZE	TIN-PLATED	7000PCS
5T2001N-PG0RA01	AWG#24-#30	1.50mm(MAX)	PHOSPHOR BRONZE	GOLD-FLASH	

REV.	ECN NO. OR DESCRIPTION	REVISED	DATE
C	ECN-202511031	Oliver	2025/11/27
B	ADD THE AFTER PLATED DIRECTION	Tim	2022/10/11

糧德精密有限公司
Amtek Technology Co., Ltd.
TEL: 886-2-2260-6878
FAX: 886-2-2260-8030

品名 TITLE	TERMINAL			頁數 Page	1/1
品號 PART NO.	5T2001N-XXXXA01			繪圖 DRAWN	Jeff 2016/10/28
圖號 DRAWING NO.		版本 REV.	C	核對 CHECKED	Jonny 2016/10/28
客戶品號 CUSTOMER P/N		比例 SCALE	None	承認 APPROVED	Aaron 2016/10/28
公差 TOLERANCE	.X ± 0.25 .XX± 0.15	單位 UNIT	mm	THIRD ANGLE PROJECTION	