RoHS COMPLIANT

ORDER INFORMATION

5 M S 2 M 2 8 N - 2 X X X X X X U - 0000 - 0 1

- NO. OF CONTACTS PER ROW(02~40)
- S0:SELECTIVE Au
- B:BLACK
- ◎T:TUBE, W/O CAP
- H:TAPE & REEL ,W/O CAP
- B R:T/R WITH CAP

AMTEK糧德
2026.03.05
Released DCC

SPECIFICATIONS C

CURRENT RATE:3 A
CONTACT RESISTANCE:≤10mΩ
DIELECTRIC VOLTAGE:1000V AC FOR ONE MINUTE
OPERATION TEMPERATURE:-40°C TO +105°C
INSERTION FORCE:200g MAX
WITHDRAWAL FORCE:60g MIN
MECHANICAL LIFE CYCLE: 500 CYCLES MIN.
ACCEPTED PIN: Ø0.4 – 0.66 mm OR SQ 0.50
TEST PIN:POLISHED STEEL GAUGE Ø0.47mm

MATERIAL

INSULATOR:PPS, UL94V-0
SLEEVE:BRASS
CONTACT CLIP:4 FINGER BERYLLIUM COPPER

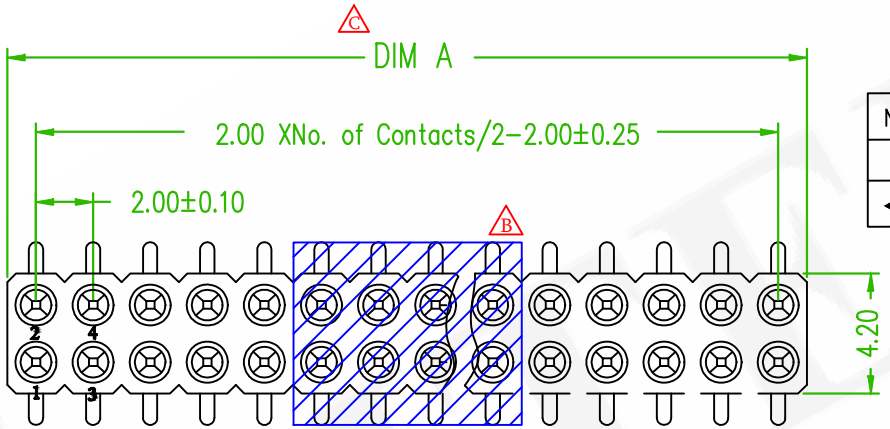

C

NO.of PIN	DIM A
40PIN	2.0*NO.of Positions+1.00±0.40
<40PIN	2.0*NO.of Positions $^{+0.60}_{-0.40}$

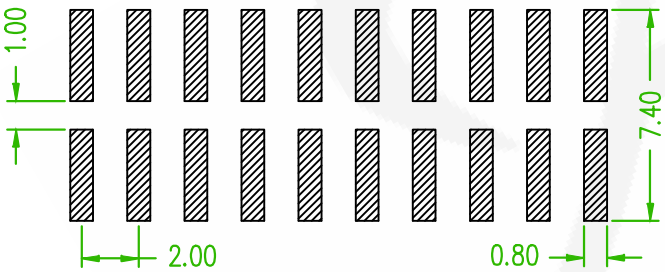

RECOMMENDED PCB LAYOUT
(PCB TOLERANCE ±0.05)

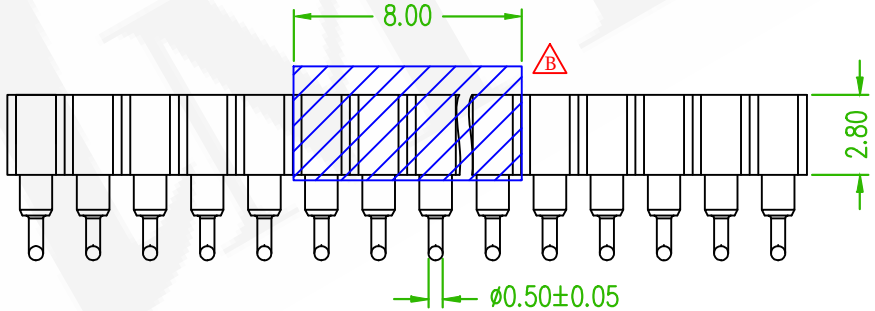

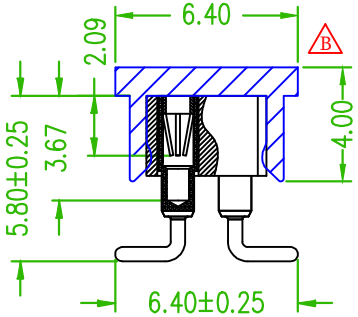

OLD PART NO.:MS2M-2XX-U

REV.	ECN NO. OR DESCRIPTION	REVISED	DATE
C	ECN-202602035	Oliver	2026/03/03
B x4	ADD THE T/R+CAP OPTIONS	Alice	2022/03/15

糧德精密有限公司
Amtek Technology Co., Ltd.
TEL: 886-2-2260-6878
FAX: 886-2-2260-8030

品名 TITLE	MACHINE PIN SOCKET 2.0mm SMT V/T TYPE			頁數 Page	1/1
品號 PART NO.	5MS2M28N-2XXXXXXU-0000-01(CN003)			繪圖 DRAWN	Jeff 2015/09/16
圖號 DRAWING NO.	GN003-DV792	版本 REV.	C	核對 CHECKED	John 2015/09/16
客戶品號 CUSTOMER P/N		比例 SCALE	None	承認 APPROVED	John 2015/09/16
公差 TOLERANCE	C .X ±0.40 .XX ±0.25 .X°±3	單位 UNIT	mm	THIRD ANGLE PROJECTION	