Electrical B

Standard: UL
Rated Voltage: 600V
Rated Current: 40A
Contact Resistance:20mΩ
Insulation Resistance: 500MΩ / DC 500V
Wire Range: 18-10AWG 6.0mm²
Dielectric Voltage: AC 2200V for one minute
Temp. Range: -40°C ~ +105°C

Mechanical

Torque:1.2Nm

Material

Housing: Nylon 66, UL94V-0
Screws: M4.0, Steel, Ni Plated
Pin Header: Copper Alloy, Tin Plated
Cover:PC,UL94V-2

ORDER INFORMATION

D

5 T B 1 3 0 S - 7 8 H E X X B L X - W 1

- 7 8 H: Series No.
- X X: No. of Poles (02~22P)
- B: B:Black
- X: B:Bag / A:Tray

certified Pb RoHS Compliant

AMTEK糧德
2021.01.13
Released DCC

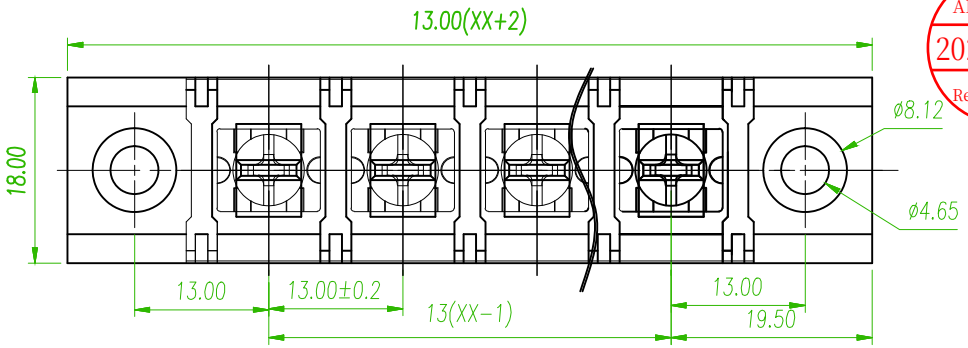

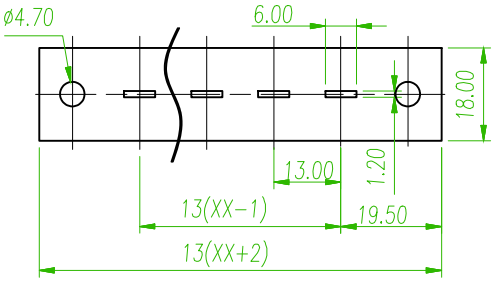

Recommended PCB Layout

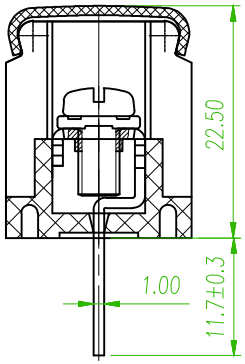

SECTION A-A

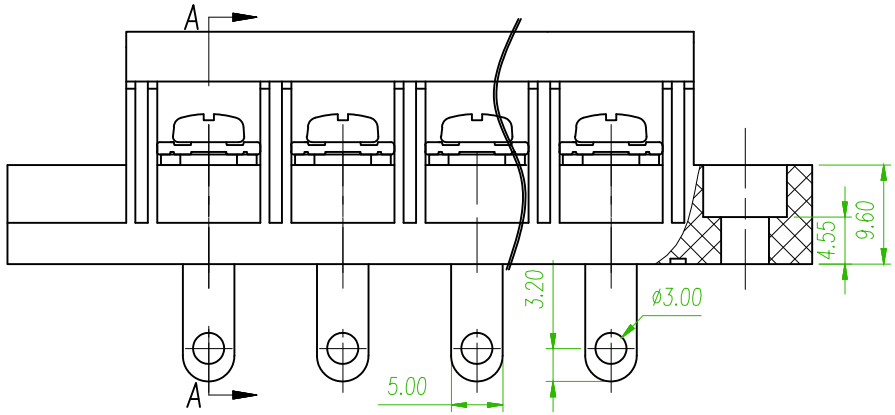

C

linear dimension(Tolerances Standard GB/T 14486-2008)								—	▱	⊥
variable range	to 6	over 6 to 10	over 10 to 30	over 30 to 60	over 60 to 100	over 100 to 160	over 160 to	to 10	over 10 to 100	over 100 to
tolerance	±0.20	±0.30	±0.50	±0.70	±1.00	±1.30	±1.60	0.10	0.30	0.60

REV.	ECN NO. OR DESCRIPTION	REVISED	DATE
D x2	ECN NO:201211 Revise the PART NO	Alice	2021/01/04
C x1	ECN NO:200718 Revise the Tolerance	Alice	2020/11/11
B x1	ECN 200102: Remove the IEC	David	2020/06/06

AMTEK
糧德精密有限公司
Amtek Technology Co., Ltd.
TEL: 886-2-2260-6878
FAX: 886-2-2260-8030

品名 TITLE	13.0mm Terminal Block			頁數 Page	1/1
品號 PART NO.	D 5TB130S-78HEXXBLX-W1			繪圖 DRAWN	Roy 2019/01/04
圖號 DRAWING NO.	GN011-R1122	版本 REV.	D	核對 CHECKED	Josh 2019/01/04
客戶品號 CUSTOMER P/N		比例 SCALE	None	承認 APPROVED	Jason 2019/01/04
公差 TOLERANCE		單位 UNIT	mm	THIRD ANGLE PROJECTION	