ELECTRICAL

	UL	IEC
Standard:	UL	IEC
Rated Voltage:	300V	250V
Rated Current:	8A	7A

Contact Resistance: 20mΩ
Withstanding Voltage: AC 2000V for one min
Insulation Resistance: 500MΩ
Wire rrange: 28-16AWG 1.5mm²

MECHANICAL

Temp. Range: -40°C ~ +105°C
Torque: 0.2Nm
Steip length: 6-7mm

MATERIAL

Housing: PA66, UL94V-0
Screws: M2 steel, Zn plated
Conductor: Copper alloy, Sn plated
Cage: Copper alloy, Ni plated

ORDER INFORMATION

5	T	P	3	8	1	N	-	5	G	B	N	X	X	E	L	X	-	0	1

- 5GB: Series No.
- XX: Poles (02-24P)
- E: E:Green
- X: A:Tray / B:Bag

certified Pb RoHS Compliant

AMTEK糧德
2020.09.16
Released DCC

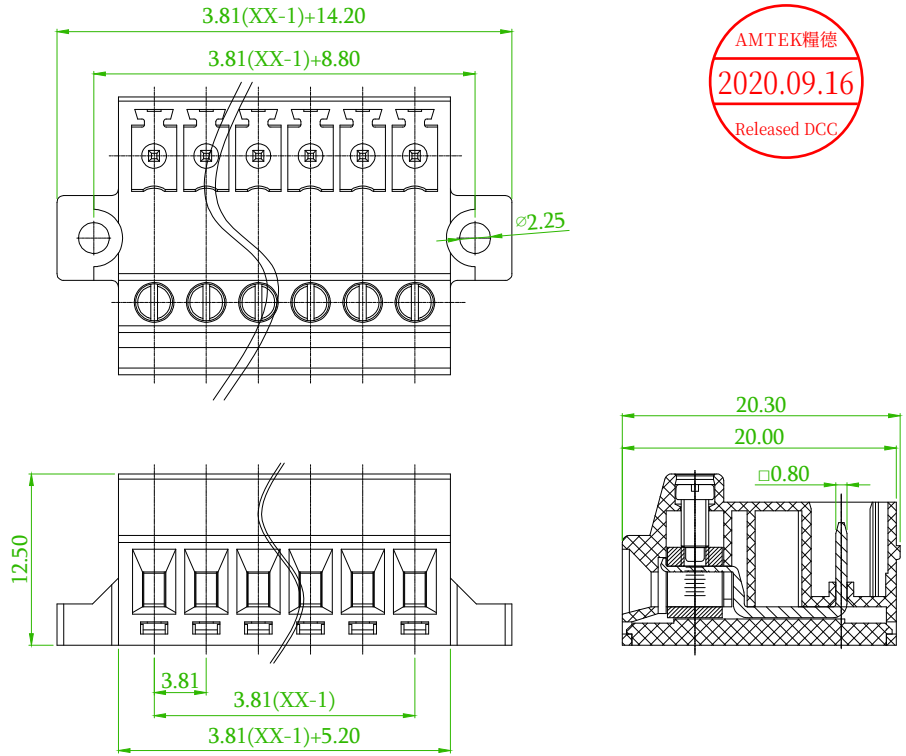

B

linear dimension(Tolerances Standard GB/T 14486-2008)								—	⏥	⊥
variable range	to 6	over 6 to 10	over 10 to 30	over 30 to 60	over 60 to 100	over 100 to 160	over 160 to	to 10	over 10 to 100	over 100 to
tolerance	±0.20	±0.30	±0.50	±0.70	±1.00	±1.30	±1.60	0.10	0.30	0.60

REV.	ECN NO. OR DESCRIPTION	REVISED	DATE
B x1	ECN NO:200718 Revise the Dimension	Alice	2020/09/09

糧德精密有限公司
Amtek Technology Co., Ltd.
TEL: 886-2-2260-6878
FAX: 886-2-2260-8030

品名 TITLE	3.81mm Terminal Block			頁數 Page	1/1
品號 PART NO.	5TP381N-5GBNXXELX-01			繪圖 DRAWN	Eric 2018/12/06
圖號 DRAWING NO.	GN011-EA211	版本 REV.	B	核對 CHECKED	Josh 2018/12/06
客戶品號 CUSTOMER P/N		比例 SCALE	None	承認 APPROVED	Jason 2018/12/06
公差 TOLERANCE		單位 UNIT	mm	THIRD ANGLE PROJECTION	