ELECTRICAL

	UL	IEC
Standard:	UL	IEC
Rated Voltage:	300V	250V
Rated Current:	8A	10A

Contact Resistance: 20MΩ
Withstanding Voltage: AC 2000V for one minunt
Insulation Resistance: 5000MΩ

MECHANICAL

Temp. Range: -40°C ~ +105°C

MATERIAL

Housing: Nylon 66, UL94V-0
Pin Header: Brass, Tin Plated

DIMENSIONS

Pitch: 3.81mm
Poles: 2P-24P

ORDER INFORMATION

5 T P 3 8 1 R - 5 E C N X X X L B - 0 1

- 381: Pitch 3.81mm
- Series No.
- No of Pins total (02~24)
- B:Bag

G:Gray	O:Orange
U:Blue	R:Red
B:Black	T:Trans-parent
E:Green	N:Brown
	W:White

AMTEK糧德
2020.09.29
Released DCC

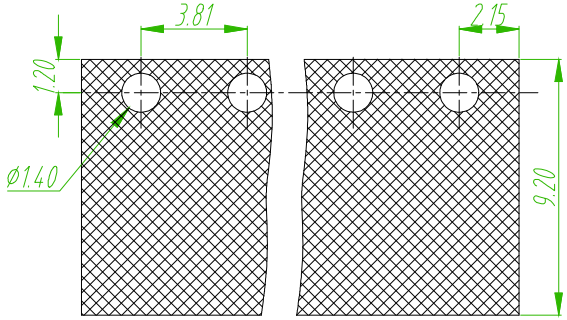

PCB LAYOUT

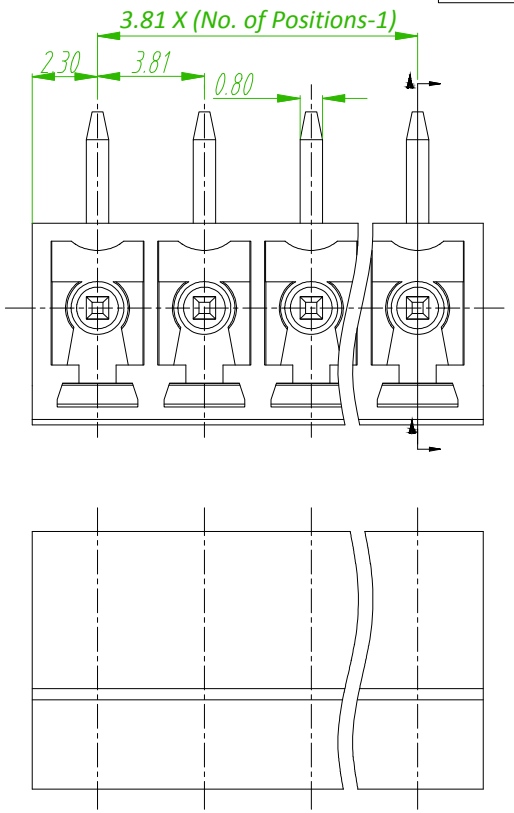

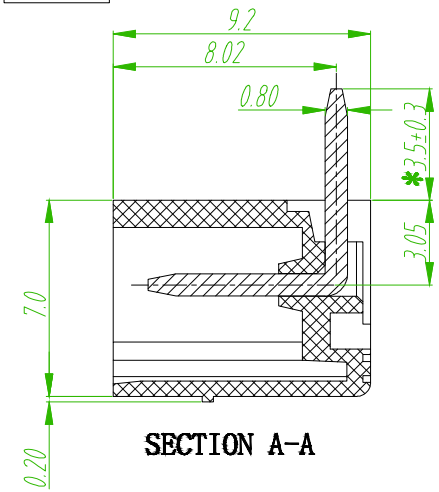

SECTION A-A

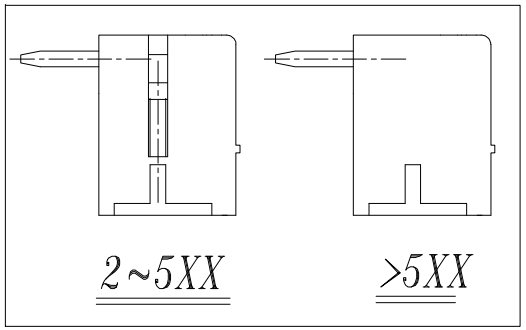

B

linear dimension(Tolerances Standard GB/T 14486-2008)								—	▱	⊥
variable range	to 6	over 6 to 10	over 10 to 30	over 30 to 60	over 60 to 100	over 100 to 160	over 160 to	to 10	over 10 to 100	over 100 to
tolerance	±0.20	±0.30	±0.50	±0.70	±1.00	±1.30	±1.60	0.10	0.30	0.60

REV.	ECN NO. OR DESCRIPTION	REVISED	DATE
B x1	ECN NO:200718 Revise the Tolerance	Alice	2020/09/10

糧德精密有限公司
Amtek Technology Co., Ltd.
TEL: 886-2-2260-6878
FAX: 886-2-2260-8030

Old Part No. :TB15ERC-3.81-XXP-1X-00A-L

品名 TITLE	Terminal Block			頁數 Page	1/1
品號 PART NO.	5TP381R-5ECNXXXLB-01			繪圖 DRAWN	Mia 2016/10/18
圖號 DRAWING NO.	GN011-AL342	版本 REV.	B	核對 CHECKED	Jonny 2016/10/18
客戶品號 CUSTOMER P/N		比例 SCALE	None	承認 APPROVED	Aaron 2016/10/18
公差 TOLERANCE		單位 UNIT	mm	THIRD ANGLE PROJECTION	