ELECTRICAL

Standard:	UL	IEC
Rated Voltage:	300V	160V
Rated Current:	16A	20A

Contact Resistance: 20mΩ
Withstanding Voltage: AC 2000V for one min
Insulation Resistance: 500MΩ
Wire range: 22-12AWG 2.5mm²

MECHANICAL

Temp. Range: -40°C ~ +105°C
Torque: 0.4Nm
Steip length: 6-7mm

MATERIAL

Housing: PA66, UL94V-0
Contactor: Copper alloy
Screw: M2.5

ORDER INFORMATION

5 T S 5 0 8 R - 1 2 8 N X X E L X - 0 1

- 128: Series No.
- XX: Poles (02-24P)
- E: E:Green
- X: A:Tray / B:Bag

AMTEK糧德
2020.12.16
Released DCC

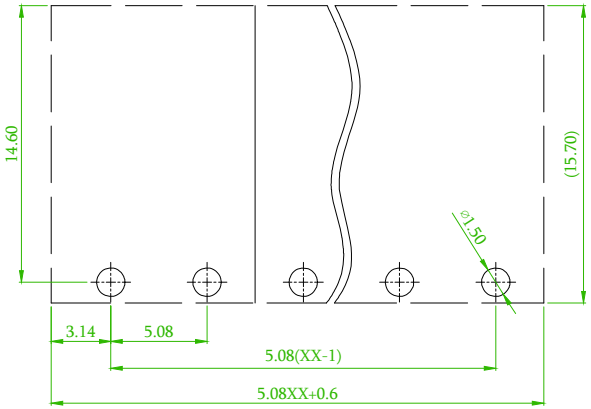

Recommended PCB Layout

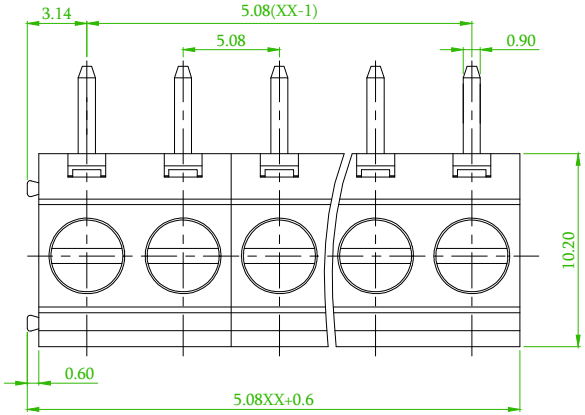

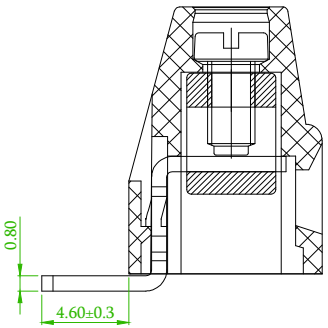

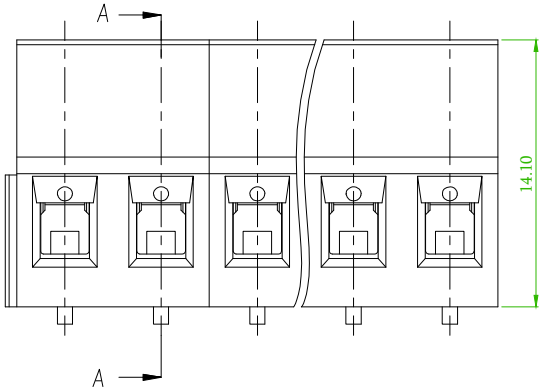

B

linear dimension(Tolerances Standard GB/T 14486-2008)								—	▱	⊥
variable range	to 6	over 6 to 10	over 10 to 30	over 30 to 60	over 60 to 100	over 100 to 160	over 160 to	to 10	over 10 to 100	over 100 to
tolerance	±0.20	±0.30	±0.50	±0.70	±1.00	±1.30	±1.60	0.10	0.30	0.60

REV.	ECN NO. OR DESCRIPTION	REVISED	DATE
B x1	ECN NO:200718 Revise the Tolerance	Alice	2020/12/08

糧德精密有限公司
Amtek Technology Co., Ltd.
TEL: 886-2-2260-6878
FAX: 886-2-2260-8030

品名 TITLE	5.08mm Terminal Block			頁數 Page	1/1
品號 PART NO.	5TS508R-128NXXELX-01			繪圖 DRAWN	Eric 2018/12/13
圖號 DRAWING NO.	GN011-EA274	版本 REV.	B	核對 CHECKED	Josh 2018/12/13
客戶品號 CUSTOMER P/N		比例 SCALE	None	承認 APPROVED	Jason 2018/12/13
公差 TOLERANCE		單位 UNIT	mm	THIRD ANGLE PROJECTION	