Electrical

Standard:	UL	IEC
Rated Voltage:	300V	450V
Rated Current:	16A	20A

Contact resistance:20mΩ
Insulation resistance:500MΩ/DC500V
Wire Range: 22-12AWG 2.5mm²
Dielectric Voltage: AC 2000V for one minute

Mechanical

Torque: 0.4Nm(3.6Lb.in)
Strip Length: 6~7mm
Temp. Range: -40°C ~ +105°C
MAX Soldering:+250°C,for 5 Sec

Material

Housing: Nylon 66, UL94V-0
Screws: M2.5, Steel,Zn Plated
Pin Header: Copper alloy, Sn Plated
Wire Guard: Copper alloy, Ni Plated

Dimensions

Pitch: 5.0mm
Poles: 2P-24P

ORDER INFORMATION

5	T	S	5	0	0	S	-	1	2	8	N	X	X	X	L	B	-	0	1

- 5TS500S: 500: Pitch5.00mm
- 128: Series No.
- N: No of Pins total (02~24P)
- XXX: G:Gray, U:Blue, B:Black, E:Green, O:Orange, R:Red, T:Trans-parent, N:Brown, W:White
- L: L:RoHS + Nylon 66

certified Pb RoHS Compliant

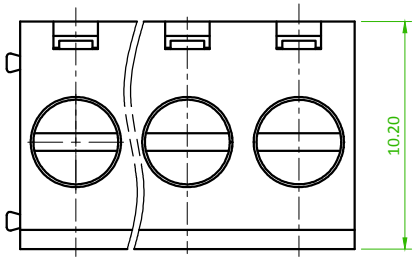

AMTEK糧德
2020.12.15
Released DCC

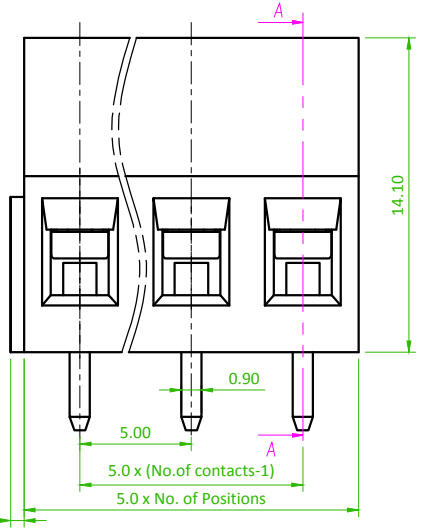

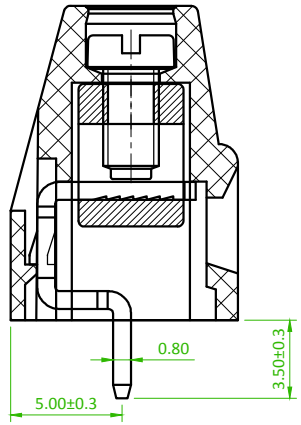

SECTION:A–A

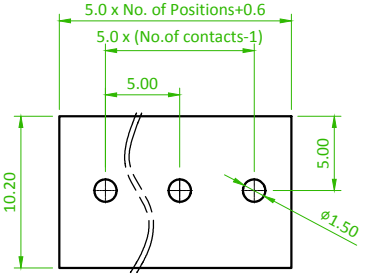

P.C.B. LAYOUT

B

linear dimension(Tolerances Standard GB/T 14486–2008)								—	⫽	⊥
variable range	to 6	over 6 to 10	over 10 to 30	over 30 to 60	over 60 to 100	over 100 to 160	over 160 to	to 10	over 10 to 100	over 100 to
tolerance	±0.20	±0.30	±0.50	±0.70	±1.00	±1.30	±1.60	0.10	0.30	0.60

REV.	ECN NO. OR DESCRIPTION	REVISED	DATE
B x1	ECN NO:200718 Revise the Tolerance	Alice	2020/12/07

Old Part No. :TB128-5.0-XXP-1X-00A-L

糧德精密有限公司
Amtek Technology Co., Ltd.
TEL: 886-2-2260-6878
FAX: 886-2-2260-8030

品名 TITLE	Terminal Block			頁數 Page	1/1
品號 PART NO.	5TS500S-128NXXXLB-01			繪圖 DRAWN	Mia 2016/09/20
圖號 DRAWING NO.	GN011-AL625	版本 REV.	B	核對 CHECKED	Jonny 2016/09/20
客戶品號 CUSTOMER P/N		比例 SCALE	None	承認 APPROVED	Aaron 2016/09/20
公差 TOLERANCE	.X ±0.20 .XX ±0.15	單位 UNIT	mm	THIRD ANGLE PROJECTION	