SPECIFICATIONS :

1. MATERIAL :
   MOLDING: THERMOPLASTIC,UL94 V-0
   CONTACT:COPPER ALLOY
   SHELL: STAINLESS STEEL
   SHIELD:STAINLESS STEEL
2. MECHANICAL :
   INSERTION FORCE : 5~20N.
   WITHDRAWAL FORCE : 8~20N.
   DURABILITY : 10000 CYCLES.
3. ELECTRICAL :
   CURRENT:5A MIN FOR VBUS;
   VOLTAGE:5VAC MAX
   0.25A MIN FOR OTHER.
   WITHSTANDING VOLTAGE : 100V AC.
   CONTACT RESISTANCE: : 40mΩ MAX.
   INSULATION RESISTANCE : 100MΩ MIN.
4. ENVIRONMENTAL :
   OPERATION TEMPERATURE : -55°C~ +85°C.

ORDER INFORMATION

5 U S 4 C 0 3 M F - 1 2 4 S 0 B U R Q 1

- F:Female
- 1:1 Port
- No. of contacts
- S0:Selective
- B:Black
- RoHS
- R:T/R With Cap

certified Pb REV. RoHS Compliant

AMTEK糧德
2019.07.16
Released DCC

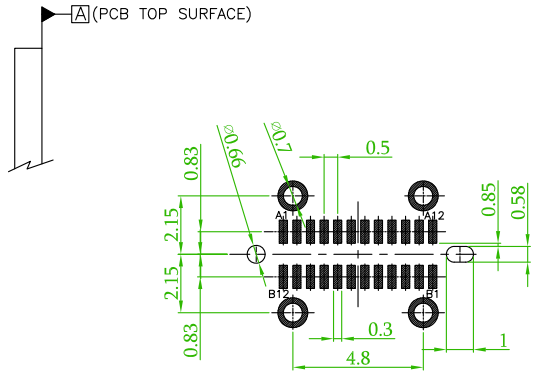

PCB LAYOUT
(TOLERANCE±0.1)

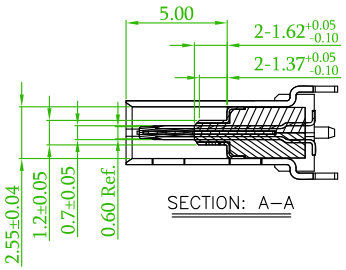

SECTION: A-A

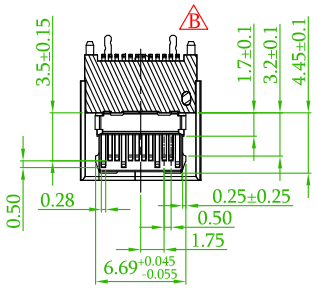

SECTION: B-B

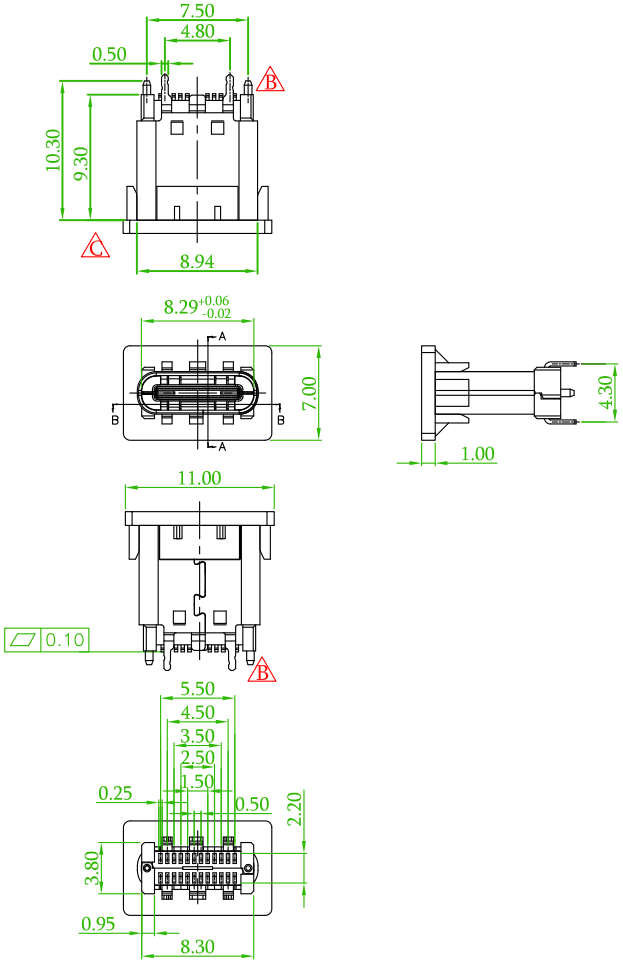

PIN	A1	A2	A3	A4	A5	A6	A7	A8	A9	A10	A11	A12
DEFINE	GND	TX1+	TX1-	VBUS	CC1	D+	D-	SBU1	VBUS	RX2-	RX2+	GND
DEFINE	GND	RX1+	RX1-	VBUS	SBU2	D-	D+	CC2	VBUS	TX2-	TX2+	GND
PIN	B12	B11	B10	B9	B8	B7	B6	B5	B4	B3	B2	B1

REV.	ECN NO. OR DESCRIPTION	REVISED	DATE
C x1	QEC No.190706: Revise the Drawing	Daniel	2019/07/06
B x3	QEC No.190502: Revise the Drawing	Daniel	2019/05/16

AMTEK
糧德精密有限公司
Amtek Technology Co., Ltd.
TEL: 886-2-2260-6878
FAX: 886-2-2260-8030

品名 TITLE	USB C TPYE Receptacle Vertical			頁數 Page	1/1
品號 PART NO.	5US4C03MF-124S0BURQ1			繪圖 DRAWN	Jeff 2016/11/09
圖號 DRAWING NO.	GN127-JF011	版本 REV.	B	核對 CHECKED	Johnny 2016/11/09
客戶品號 CUSTOMER P/N		比例 SCALE	None	承認 APPROVED	Aaron 2016/11/09
公差 TOLERANCE	.X ± 0.35 .XX ± 0.25	單位 UNIT	mm	THIRD ANGLE PROJECTION	