SPECIFICATIONS

Current Rating:50mA 12VDC
Insulation Resistance: 100MΩ Min.
Dielectric Voltage: 250V AC
Contact Resistance: 30mΩ Max.
Drive Force:160gf±30 gf
Operation Temperature:-20°C to +70°C

ORDER INFORMATION

6 4 S W T - B D 4 B 2 1 9

- B: B:Tact switch
- D: D:DIP T/R
- 4: No. of Contact
- B: B: Black

Amtek
2018.01.15
文管中心

certified Pb RoHS Compliant

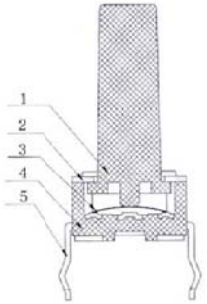

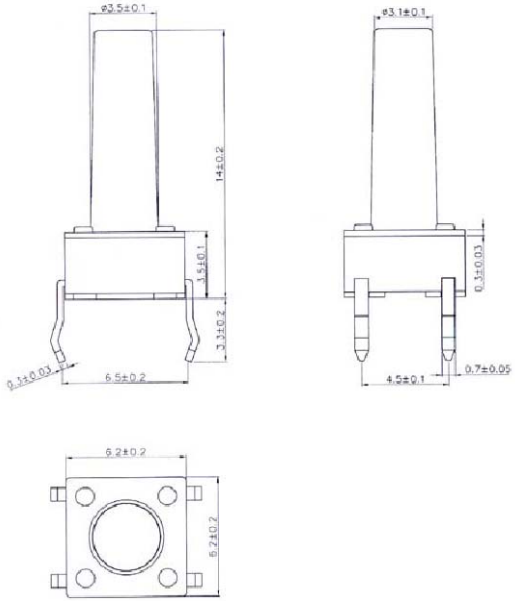

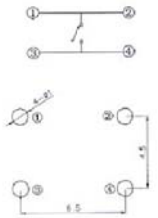

NO.	Part Name	Material	Qty
5	Locker	H65	2
4	Base	PA66(Black)	1
3	Shrapnel	AG-C5210	1
2	Cover	H65	1
1	Button	PA66(Black)	1

Recommended P.C.B Layout
(PCB Tolerances±0.1)

REV.	ECN NO. OR DESCRIPTION	REVISED	DATE

糧德精密有限公司
Amtek Technology Co., Ltd.
TEL: 886-2-2260-6878
FAX: 886-2-2260-8030

品名 TITLE	Tact Switch			頁數 Page	1/1
品號 PART NO.	64SWT-BD4B219			繪圖 DRAWN	Andy 2017/12/14
圖號 DRAWING NO.	GN026-AA350	版本 REV.	A	核對 CHECKED	Josh 2017/12/14
客戶品號 CUSTOMER P/N		比例 SCALE	None	承認 APPROVED	Jason 2017/12/14
公差 TOLERANCE	±0.2	單位 UNIT	mm	THIRD ANGLE PROJECTION	