MATERIAL & FINISH

Housing & Insert:PBT or Hi-Temp.,UL94V-0,black
Conductor:0.35 mm thickness phosphor bronze
Gold plated over nickel on contact area
Tin plated over nickel on solder area
Shield:Bronze plated nickel
Durability:750 cycles min

ELECTRICAL

Voltage Rating:125V
Current Rating:1.5A
Contact Resistance:30 milliohms max
Insulantion Resistance:500 megaohms min
Dielectric Withstanding Voltage:1000V

ORDER INFORMATION

5 R J 1 D S 1 0 X 2 X - X X X X 0 0 X - 260 - A 1

- 1: With Shielded
- F:F Type / R:R Type
- N:W/O Ear / E:With Ear
- Number of position: 8:8P / A:10P
- Number of contact: 8:8C / A:10C
- C: SA:Selective 6u" / SF:Selective15u" / SD:Selective 30u" / SH:Selective 50u"
- A: L:RoHS +PBT+Tray / H:RoHS +PBT+T/R / U:RoHS +Hi-Temp.+Tray / R:RoHS +Hi-Temp.+T/R

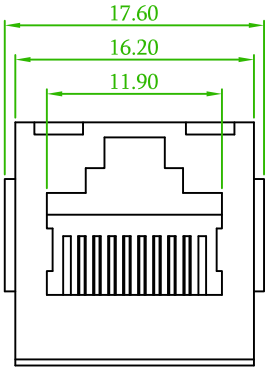

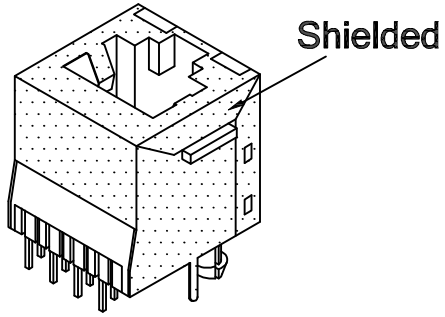

AMTEK糧德
2018.10.12
Released DCC

R Type

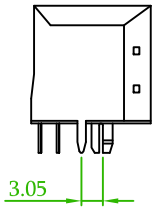

F Type

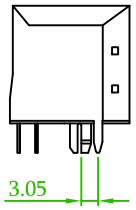

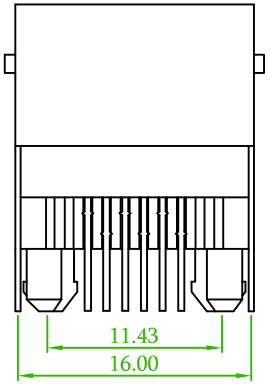

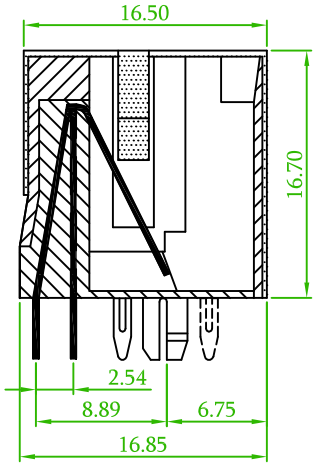

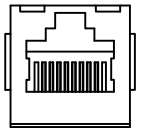

With Ear

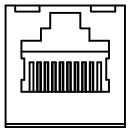

W/O Ear

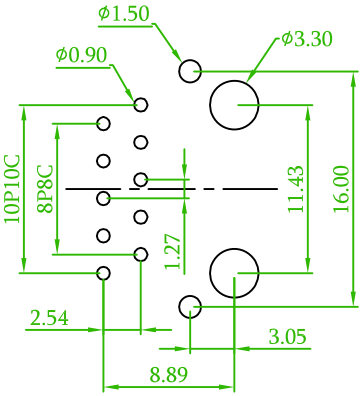

PCB LAYOUT / TOP VIEW / (R TYPE)

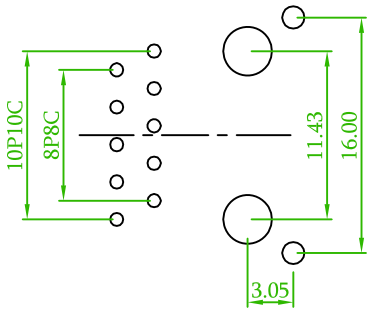

PCB LAYOUT / TOP VIEW / (F TYPE)

Old Part No.:S260-L

REV.	ECN NO. OR DESCRIPTION	REVISED	DATE
C x1	ECN NO.:180605,Revise the Plated:S5->SH	Mia	2018/10/01
B x2	Add the Hi-Temp. & Tape-Reel	Mia	2018/05/28

AMTEK
糧德精密有限公司
Amtek Technology Co., Ltd.
TEL: 886-2-2260-6878
FAX: 886-2-2260-8030

品名 TITLE	Modular JACK Top Entry			頁數 Page	1/1
品號 PART NO.	B 5RJ1DS10X2X-XXXX00X-260-A1			繪圖 DRAWN	Jeff 2015/09/16
圖號 DRAWING NO.	GW005-MD160	版本 REV.	C	核對 CHECKED	John 2015/09/16
客戶品號 CUSTOMER P/N		比例 SCALE	None	承認 APPROVED	John 2015/09/16
公差 TOLERANCE	.X ±0.25 .XX ±0.15	單位 UNIT	mm	THIRD ANGLE PROJECTION	