MATERIAL

Housing:PPS+G.F,UL94V-0
Contact:Phosphor Bronze,T=0.20mm

ORDER INFORMATION

5 S B D 1 2 2 0 M 0 - G 0 N U H - A 0 1

- G0: G0:Gold Flash
- N: N:Brown
- U: RoHS
- H: H:T/R

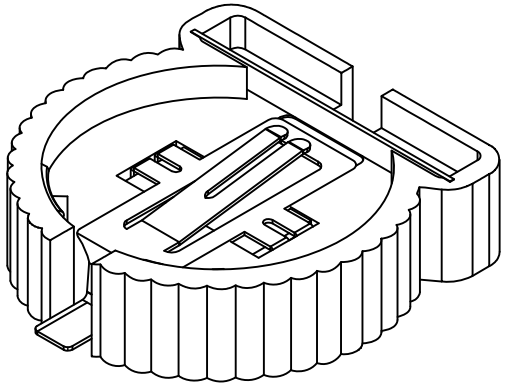

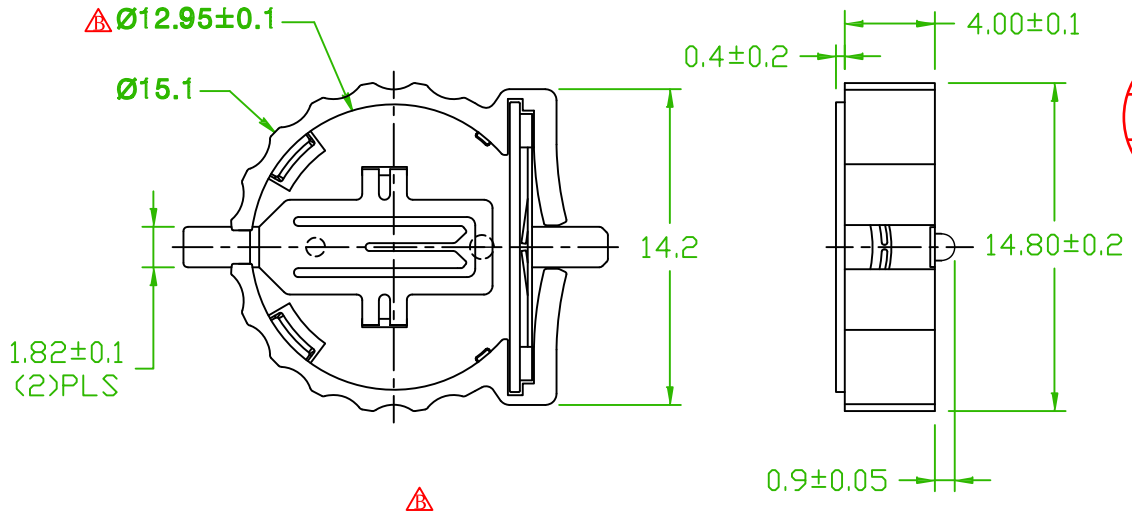

AMTEK糧德
2019.05.28
Released DCC

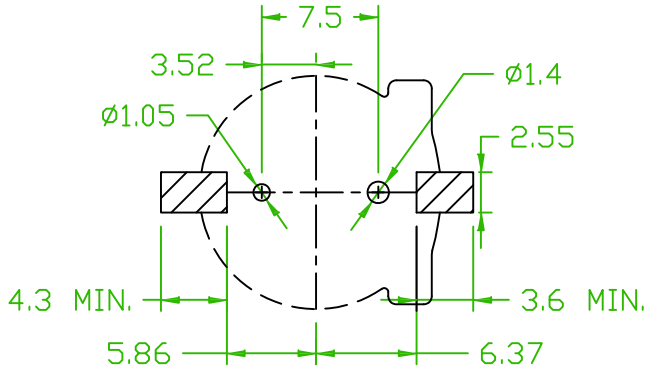

Recommended PCB Layout
(PCB TOLERANCE ±0.05)

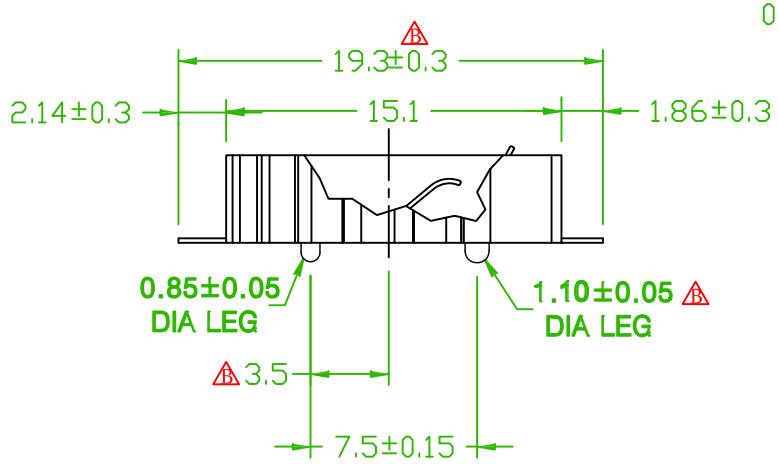

Old P/N:BTM-1220GNR-U

REV.	ECN NO. OR DESCRIPTION	REVISED	DATE
x4	Revise the drawing	Nick	2019/04/30

糧德精密有限公司
Amtek Technology Co., Ltd.
TEL: 886-2-2260-6878
FAX: 886-2-2260-8030

品名 TITLE	BATTERY HOLDER			頁數 Page	1/1
品號 PART NO.	5SBD1220M0-G0NUH-A01			繪圖 DRAWN	Roy 2017/06/15
圖號 DRAWING NO.		版本 REV.	B	核對 CHECKED	Jerry 2017/06/15
客戶品號 CUSTOMER P/N		比例 SCALE	None	承認 APPROVED	Jerry 2017/06/15
公差 TOLERANCE	.X ± 0.20 .XX ± 0.10 X°±3°	單位 UNIT	mm	THIRD ANGLE PROJECTION	