SPECIFICATIONS

CONTACT CURRENT RATING : 5.0 A
CONTACT RESISTANCE : 10 mΩ MAX.
DIELECTRIC WITHSTANDING VOLTAGE : 1000 V AC MIN.
INSULATION RESISTANCE : 5GΩ MIN.
TEMPERATURE RATING : −55°C ~ +125°C

MATERIAL

SHELL : STEEL MATERIAL, FRONT SHELL NICKEL FINISHED
BACK SHELL NICKEL FINISHED
DIMPLES ON PLUG ONLY
INSULATOR : PBT THERMOPLASTIC, 30% GLASS FILLED,
UL 94V-0 RATED, BLACK COLOR
SIGNAL CONTACT : COPPER ALLOY

ORDER INFORMATION

5 7 C D S S 2 M - C 3 N N X X B A - 0 5

2:Nickel shell + L(RoHS)	N:None	N:Clear Hold ø3.05	Heigh Power Contact	Signal Contact	B:Black	A:Tray	Performance
			1=G0:Gold Flash	1=G0:Gold Flash			5:50Ω
			5=GD:Gold 30u"	5=GD:Gold 30u"			
			6=GF:Gold 15u"	6=GF:Gold 15u"			

AMTEK糧德
2019.12.30
Released DCC

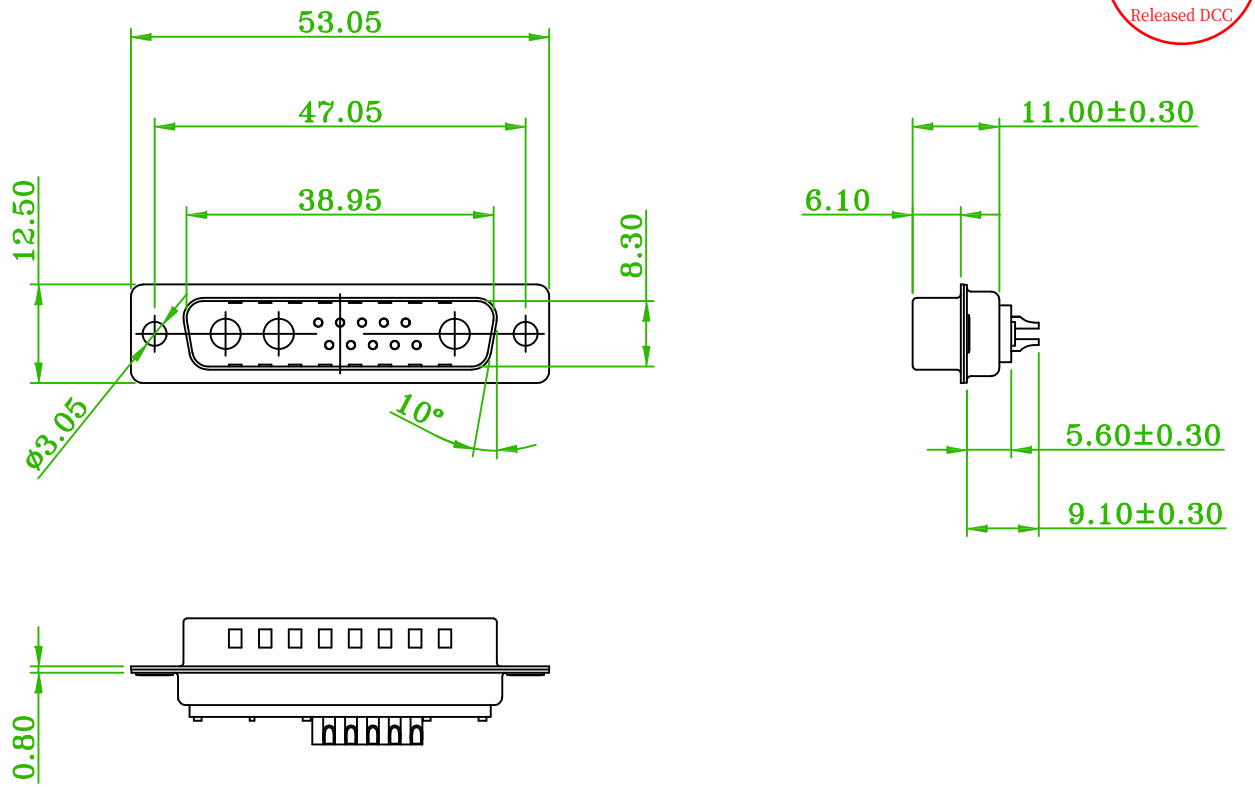

REV.	ECN NO. OR DESCRIPTION	REVISED	DATE

糧德精密有限公司
Amtek Technology Co., Ltd.
TEL: 886-2-2260-6878
FAX: 886-2-2260-8030

品名 TITLE	Coaxial D-SUB Solder 180° TYPE			頁數 Page	1/1
品號 PART NO.	57CDSS2M-C3NNXXBA-05			繪圖 DRAWN	David 2019/12/30
圖號 DRAWING NO.	GW138-DV592	版本 REV.	A	核對 CHECKED	Josh 2019/12/30
客戶品號 CUSTOMER P/N		比例 SCALE	None	承認 APPROVED	Josh 2019/12/30
公差 TOLERANCE	.X ± 0.30 .XX ± 0.20	單位 UNIT	mm	THIRD ANGLE PROJECTION	