SPECIFICATIONS

Wire Range: AWG#18-#22.
Insultion O.D: 2.40mm (max).
Qty/reel:4,000 PCS

ORDER INFORMATION

5 T 4 1 4 0 M - X X X R G 0 1

- 4140: Pitch 4.14mm
- X: B:Brass / P:Phosphor Bronze
- XX: G0:Gold Flash / T0:Tin Plated
- R: R:Tape&Reel

certified Pb RoHS Compliant

AMTEK糧德
2019.05.28
Released DCC

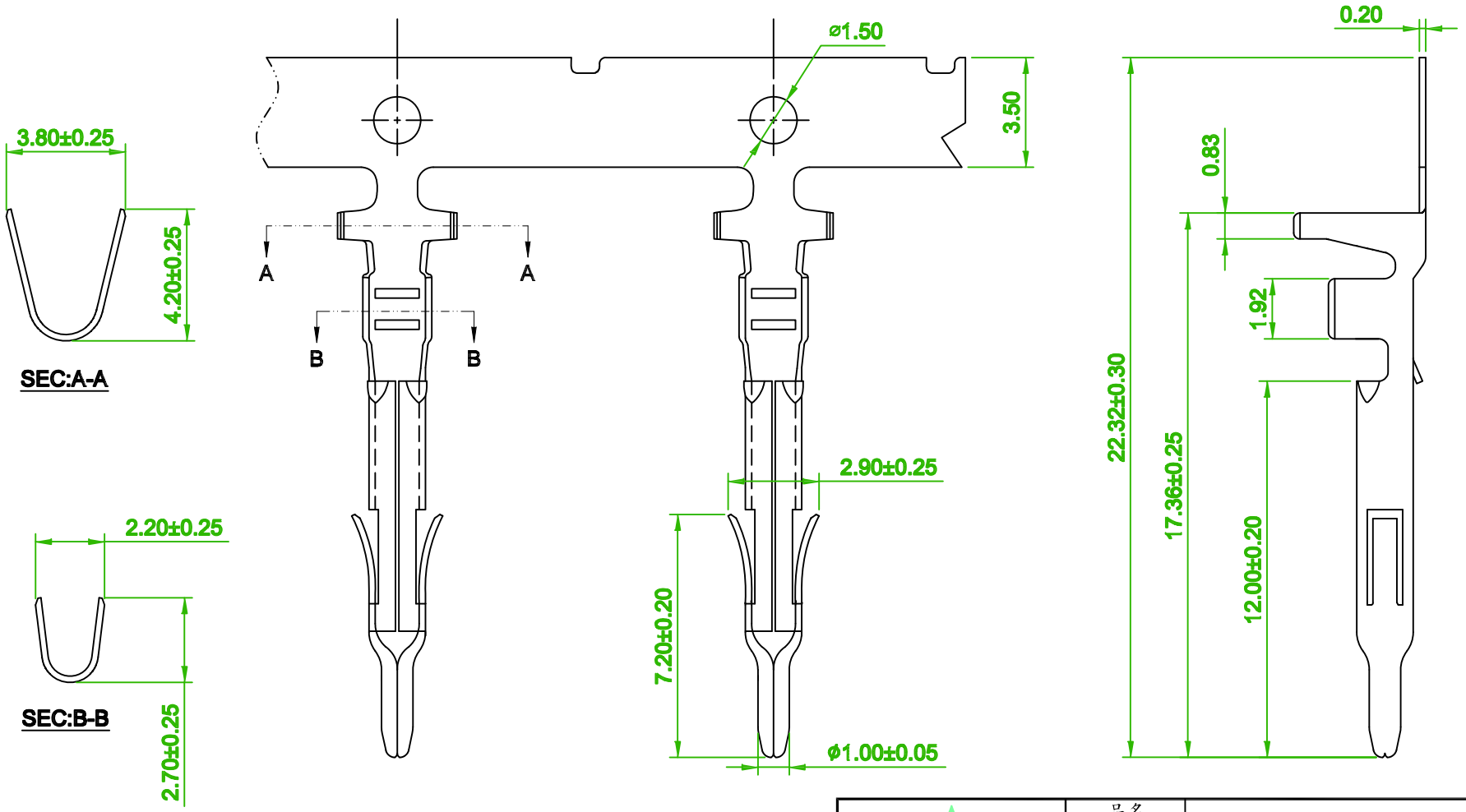

REV.	ECN NO. OR DESCRIPTION	REVISED	DATE

糧德精密有限公司
Amtek Technology Co., Ltd.
TEL: 886-2-2260-6878
FAX: 886-2-2260-8030

品名 TITLE	4.14mm TERMINAL			頁數 Page	1/1
品號 PART NO.	5T4140M-XXXRG01			繪圖 DRAWN	Nick 2019/05/28
圖號 DRAWING NO.	GW083-GA171	版本 REV.	A	核對 CHECKED	Josh 2019/05/28
客戶品號 CUSTOMER P/N		比例 SCALE	None	承認 APPROVED	Josh 2019/05/28
公差 TOLERANCE	.X ± 0.25 .XX ± 0.20	單位 UNIT	mm	THIRD ANGLE PROJECTION	