SPECIFICATIONS

Current Rating: 7 AMP
Insulation Resistance: 1000MΩ Min.
Contact Resistance: 20mΩ Max.
Dielectric Voltage: 500V AC for one minute
Operation temperature: -40°C to +105°C ◎:Standard Recommend

MATERIAL

Insulator: Hi-Temp. Thermoplastic, UL94V-0, Black
Contact Pin: Copper Alloy

ORDER INFORMATION

5 P H A M S A 2 5 - 2 X X X X N N X U - A/B/C - 0 0

- 2: 2:Dual Row
- No. of contacts Per Row
- X: G0:Gold Flash, GA:5u", GB:10u", GC:20u", GD:30u", T0:Tin Plated, TE:Tin 200u"
- X: S0:Selective, SA:5u", SB:10u", SC:20u", SD:30u"
- N: N:W/O Peg
- N: N:Non Type
- X: X:Box, R:T/R With Cap, C:Tube With Cap
- U: B:Bag, H:T/R W/O Cap, T:Tube W/O Cap
- U: RoHS
- A/B/C: EX:060110042 A:6.0(060) B:11.0(110) C:4.2(042)

Amtek 2018.02.12 文管中心

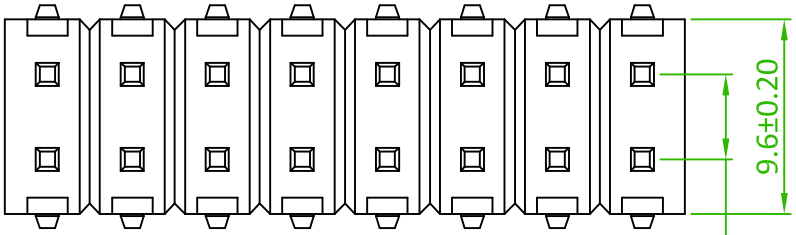

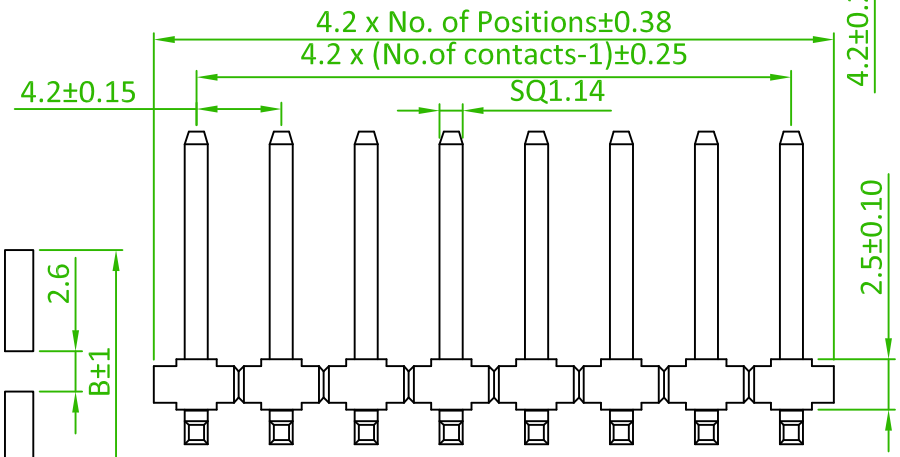

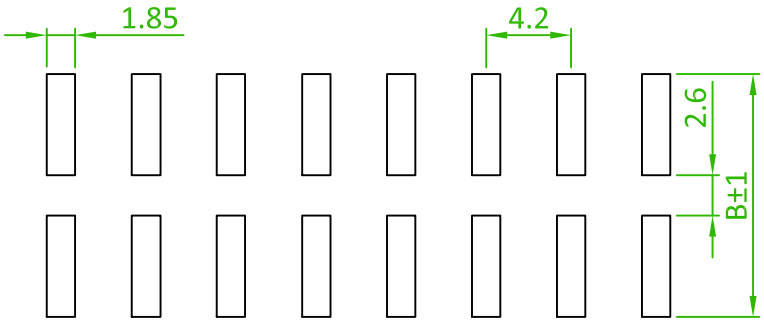

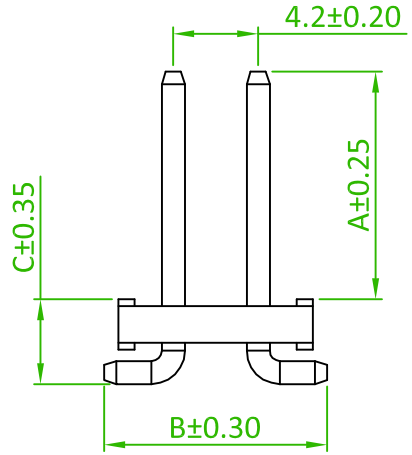

Old Part No. : PH42M25-2XX-U

Recommended PCB Layout
(PCB TOLERANCE ±0.1)

REV.	ECN NO. OR DESCRIPTION	REVISED	DATE

糧德精密有限公司
Amtek Technology Co., Ltd.
TEL: 886-2-2260-6878
FAX: 886-2-2260-8030

品名 TITLE	PIN HEADER 4.2mm			頁數 Page	1/1
品號 PART NO.	5PHAMSA25-2XXXXNNXU -XXXXXXXXX-00			繪圖 DRAWN	Jeff 2016/09/19
圖號 DRAWING NO.		版本 REV.	A	核對 CHECKED	Johnny 2016/09/19
客戶品號 CUSTOMER P/N		比例 SCALE	None	承認 APPROVED	Aaron 2016/09/19
公差 TOLERANCE	.X ± 0.38 .XX ± 0.25	單位 UNIT	mm	THIRD ANGLE PROJECTION	