SPECIFICATION

Current Rating: 3 AMP
Insulation Resistance: 1000MΩ Min.
Contact Resistance: 20mΩ Max.
Dielectric Voltage: 500V AC for one minute
Operation Temperature: -40°C to +105 °C

MATERIAL

Insulator: Hi-Temp. Thermoplastic, UL94V-0, Black
Contact Pin: Copper Alloy

ORDER INFORMATION

5 P H 1 R D A 1 5 - 2 X X X X N N X U - A B C - 0 0

- 2: 2:Dual Row
- X: No. of contacts Per Row(02~40)

G0:Gold Flash	S0:Selective Au
GA:Au 5u"	SA:Selective Au 5u"
GB:Au 10u"	SB:Selective Au 10u"
GC:Au 20u"	SC:Selective Au 20u"
GD:Au 30u"	SD:Selective Au 30u"
T0:Tin Plated	TE:Tin 200u"

- N: N:W/O Peg
- N: N:Non Type
- X: X:Box / B:Bag / C:Tube With Cap
- U: U:RoHS+Hi-Temp.
- A B C: EX:060030039 A:6.0 B:3.0 C:3.9

Amtek 2018.02.12 文管中心

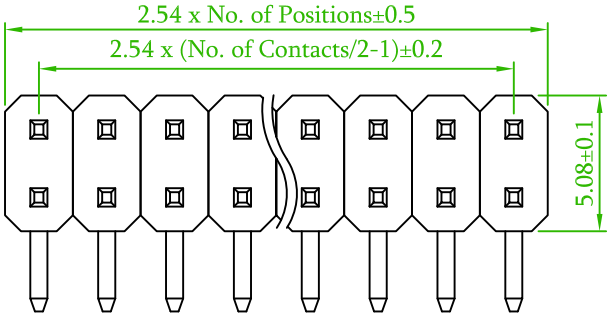

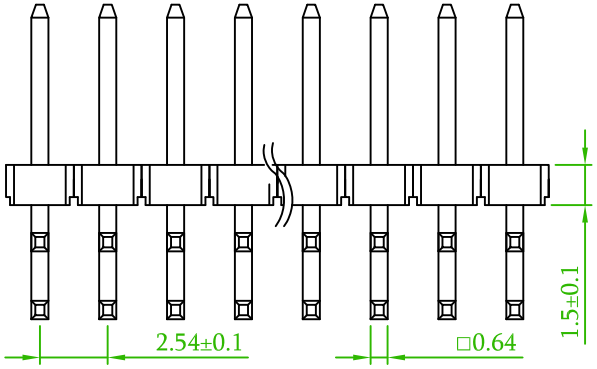

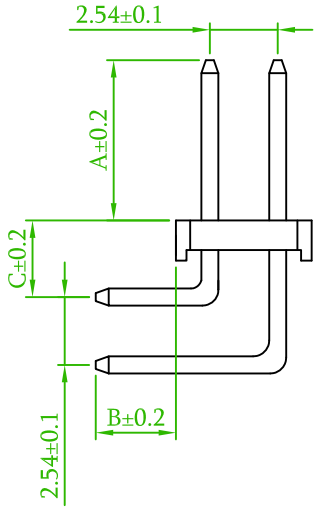

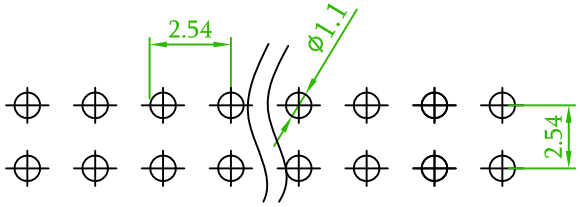

Recommended PCB Layout
(PCB TOLERANCE ±0.1)

Old Part No. : PH1RD15-2XX-U

REV.	ECN NO. OR DESCRIPTION	REVISED	DATE
B	Modify order informatin	B	2017/01/24 Gary

AMTEK
糧德精密有限公司
Amtek Technology Co., Ltd.
TEL: 886-2-2260-6878
FAX: 886-2-2260-8030

品名 TITLE	PIN HEADER 2.54mm D/R R/A DIP TYPE			頁數 Page	1/1
品號 PART NO.	5PH1RDA15-2XXXXNNXU -XXXXXXXXX -00			繪圖 DRAWN	Jeff 2016/09/19
圖號 DRAWING NO.	GN016-GA138	版本 REV.	B	核對 CHECKED	Johnny 2016/09/19
客戶品號 CUSTOMER P/N		比例 SCALE	None	承認 APPROVED	Aaron 2016/09/19
公差 TOLERANCE	.X ± 0.35 .XX ± 0.25	單位 UNIT	mm	THIRD ANGLE PROJECTION	