NOTE: D
MATERIAL: zinc alloy
SCREW: STEEL
FINISHED: Nickel plated

ORDER INFORMATION

5 H D 1 1 7 Z R - 0 9 N S A X

- Z: Z:Zinc Alloy
- 09: C No. of Pin
- S: S:Single Package
- X: Dim. "X"
  1=ø11.0mm
  2=ø6.0mm
  3=ø7.5mm
  4=ø9.0mm

AMTEK糧德
2019.12.13
Released DCC

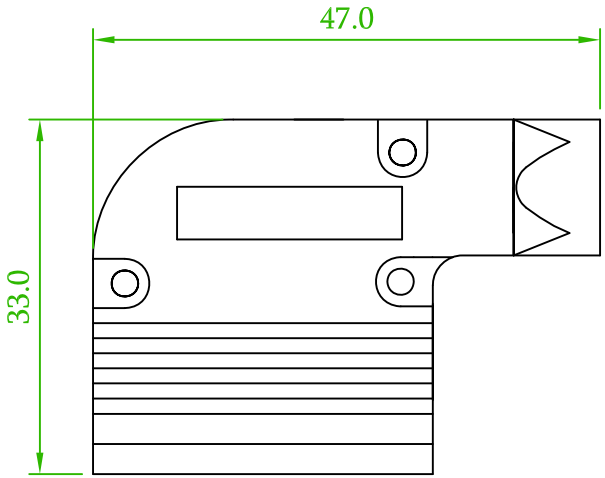

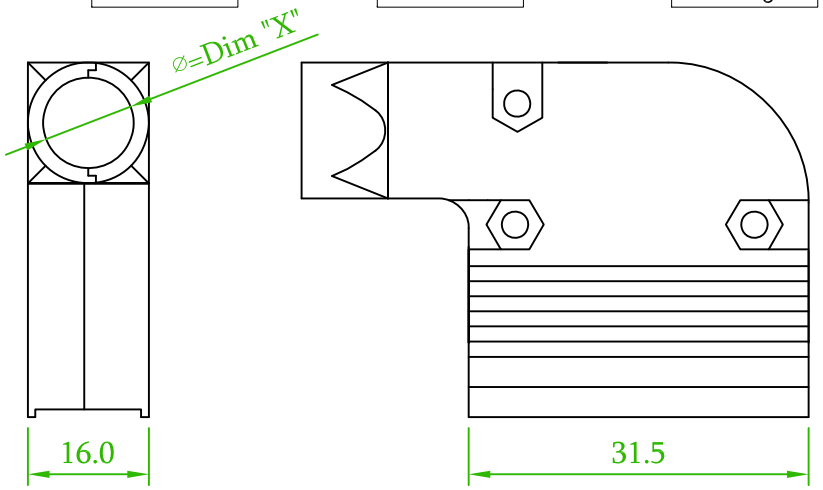

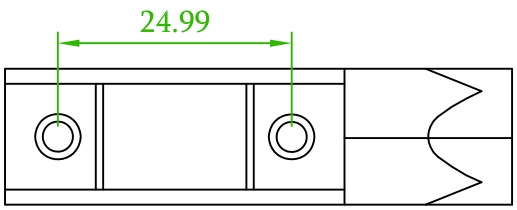

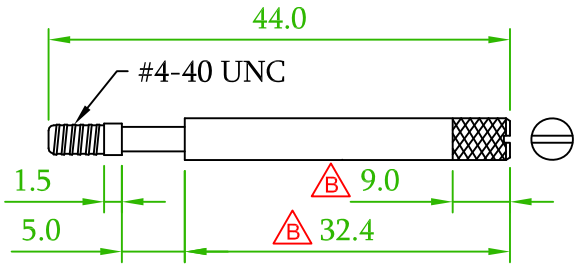

Long Bolt

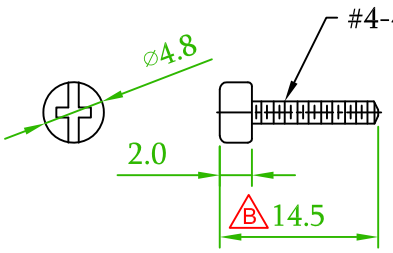

Short Screw

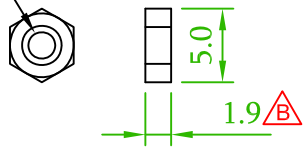

Nut

Old P/N:HOOD117-XXDTYX-L

REV.	ECN NO. OR DESCRIPTION	REVISED	DATE
D x1	ECN-191112 Add the SPEC	Nick	2019/12/12
C x1	Remove options, note.	Gary	2019/01/22
B x9	ECN NO.: 180713, revise dimensions.	Gary	2018/08/14

糧德精密有限公司
Amtek Technology Co., Ltd.
TEL: 886-2-2260-6878
FAX: 886-2-2260-8030

品名 TITLE	HOOD117 Series 09 Pin			頁數 Page	1/1
品號 PART NO.	5HD117ZR-09NSAX			繪圖 DRAWN	Gary 2017/04/25
圖號 DRAWING NO.	GW001-GA391	版本 REV.	D	核對 CHECKED	Josh 2019/01/22
客戶品號 CUSTOMER P/N		比例 SCALE	None	承認 APPROVED	Josh 2019/01/22
公差 TOLERANCE	.X ± 0.30 .XX ± 0.20	單位 UNIT	mm	THIRD ANGLE PROJECTION	