ELECTRICAL

Standard:	UL	IEC
Voltage Rating:	300V	250V
Current Rating:	20A	24A

Wire Range: 24-12AWG 2.5mm²
Insulation Resistance:500MΩ
Contact Resistance:20mΩ
Withstanding Voltage: AC 2000V for one min

MECHANICAL

Torque:0.4Nm
Strip:12-13mm
Temperature Range: -40°C ~ +105°C

MATERIAL

Housing: PA66, UL94V-0
Screw:M2.5 Steel,Zn Plated
Pin Header: Copper Alloy,Sn Plated
Cage:Steel,Ni Plated
Slide Block:Steel,Zn Plated

ORDER INFORMATION

5 T S 7 5 0 R - 1 0 5 N X X E L X - 0 1

- 105: Series No.
- XX: No of Pins total (02~30)
- E: E:Green
- X: B:Box

certified Pb RoHS Compliant

AMTEK糧德
2020.12.21
Released DCC

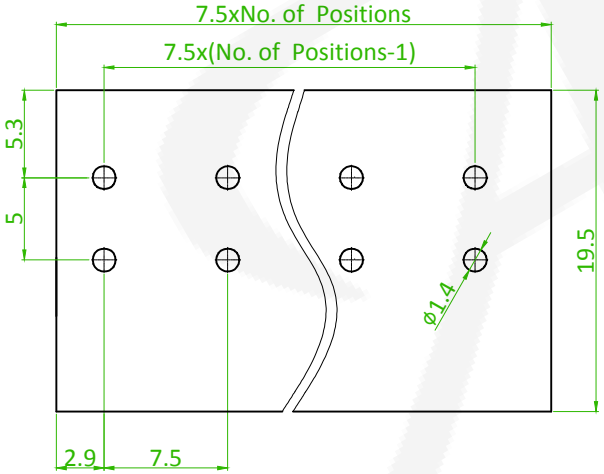

Rrcommended P.C.B Layout
(PCB TOLERANCE±0.1)

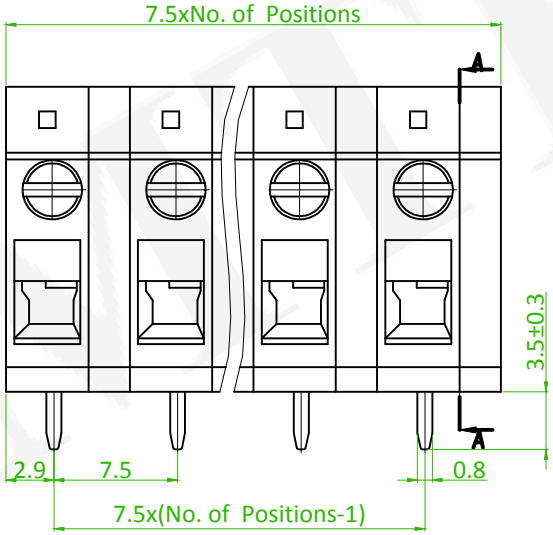

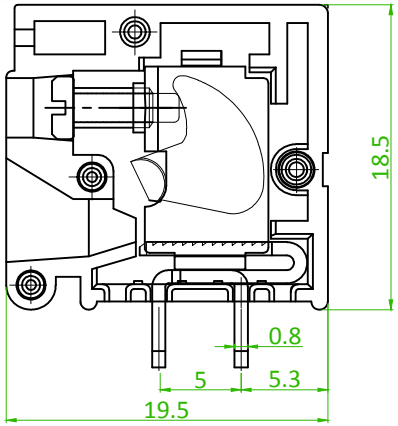

SECTION:A–A

B

linear dimension(Tolerances Standard GB/T 14486-2008)								—	▱	⊥
variable range	to 6	over 6 to 10	over 10 to 30	over 30 to 60	over 60 to 100	over 100 to 160	over 160 to	to 10	over 10 to 100	over 100 to
tolerance	±0.20	±0.30	±0.50	±0.70	±1.00	±1.30	±1.60	0.10	0.30	0.60

REV.	ECN NO. OR DESCRIPTION	REVISED	DATE
B x1	ECN NO:200718 Revise the Tolerance	Alice	2020/12/10

糧德精密有限公司
Amtek Technology Co., Ltd.
TEL: 886-2-2260-6878
FAX: 886-2-2260-8030

品名 TITLE	7.5mm Terminal Block			頁數 Page	1/1
品號 PART NO.	5TS750R-105NXXELX-01			繪圖 DRAWN	Roy 2018/05/04
圖號 DRAWING NO.	GN011-RR446	版本 REV.	B	核對 CHECKED	Josh 2018/05/04
客戶品號 CUSTOMER P/N		比例 SCALE	None	承認 APPROVED	Jason 2018/05/04
公差 TOLERANCE		單位 UNIT	mm	THIRD ANGLE PROJECTION	