Electrical B

	UL	IEC
Standard:	UL	IEC
Rated Voltage:	300V	300V
Rated Current:	12A	10A

Withstanding Voltage: AC 1600V for one min
Wire range:26~14AWG 1.5mm²
Impulse withstand Voltage: 4.0KV

Mechanical
Temp. Range: -40°C ~ +105°C
Torque(Max):0.4Nm(3.6Lb.in)
Stripping Length:5-6mm

Dimensions
Pitch: 5.08mm
Poles:2-24P

Material
Housing: PA66, UL94V-0
Screws:M2.5 Steel
Contact Pin:Copper alloy Sn plated

ORDER INFORMATION

5 T S 5 0 8 S - 1 2 7 N X X E L B - 0 X

- 508: Pitch 5.08mm
- Series No.
- No of Pins total (02~24)
- E:Green
- B:Bag
- B 01:Slotted screw / 02:Phillips screws

certified Pb RoHS Compliant

AMTEK糧德
2021.06.07
Released DCC

5TS508S-127NXXELB-02

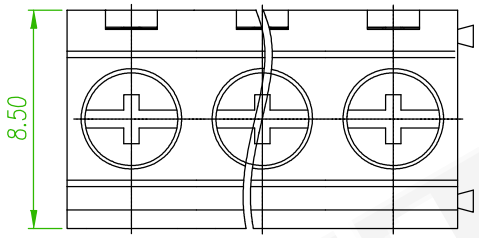

5TS508S-127NXXELB-01

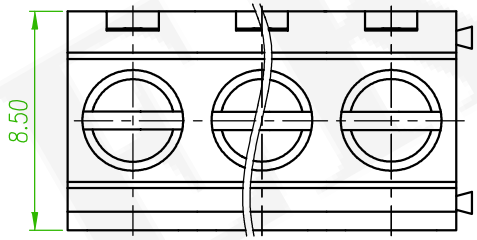

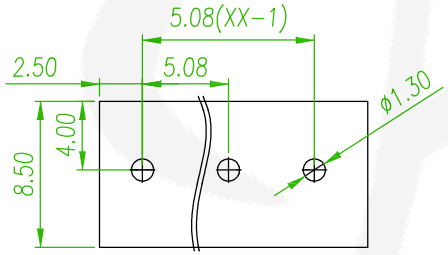

P.C.B. LAYOUT

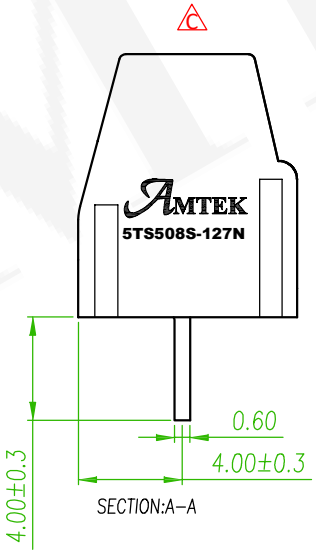

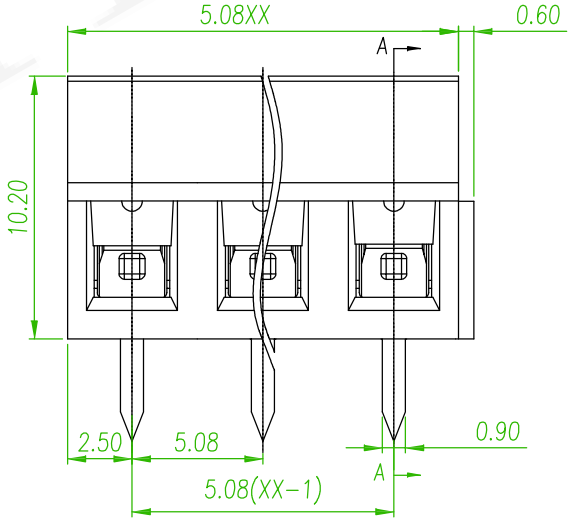

B

linear dimension(Tolerances Standard GB/T 14486-2008)								—	▱	⊥
variable range	to 6	over 6 to 10	over 10 to 30	over 30 to 60	over 60 to 100	over 100 to 160	over 160 to	to 10	over 10 to 100	over 100 to
tolerance	±0.20	±0.30	±0.50	±0.70	±1.00	±1.30	±1.60	0.10	0.30	0.60

Old Part No. :TB127-5.08-XXP-1X-00A-L

REV.	ECN NO. OR DESCRIPTION	REVISED	DATE
C x1	ECN NO:210508 Add the LOGO	Benson	2021/05/24
B x3	Increase screw options,Revise the SPEC	Nick	2019/08/30

糧德精密有限公司
Amtek Technology Co., Ltd.
TEL: 886-2-2260-6878
FAX: 886-2-2260-8030

品名 TITLE	Terminal Block			頁數 Page	1/1
品號 PART NO.	5TS508S-127NXXELB-0X			繪圖 DRAWN	Mia 2016/08/18
圖號 DRAWING NO.	GN011-NI334	版本 REV.	C	核對 CHECKED	Boris 2016/08/18
客戶品號 CUSTOMER P/N		比例 SCALE	None	承認 APPROVED	Boris 2016/08/18
公差 TOLERANCE		單位 UNIT	mm	THIRD ANGLE PROJECTION	