ELECTRICAL

	UL	IEC
Standard:	UL	IEC
Rated Voltage:	250V	250V
Rated Current:	16A	24A

Contact Resistance: 20mΩ
Withstanding Voltage: AC 2000V for one min
Insulation Resistance: 500MΩ
Wire rrange: 22-14AWG 2.5mm²

MECHANICAL

Temp. Range: -30°C ~ +120°C
Steip length: 4.5-5mm
Torque: 0.4Nm

MATERIAL

Housing: PA66, UL94V-0
Screws: M2.5, Steel Zn plated
Pin header: Copper alloy, Sn plated
Shrapnel: Phosphor bronze, Ni plated

ORDER INFORMATION

B

5 T S 5 0 0 S - 3 0 5 N X X X L X - 0 1

- 3 0 5: Series No.
- X X: Poles (02-24P)
- X: E:Green / U:Blue
- X: A:Tray / B:Bag

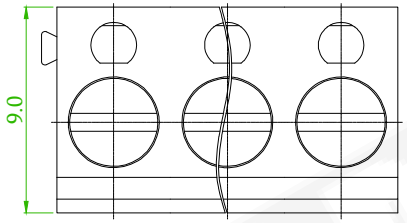

AMTEK糧德
2023.02.15
Released DCC

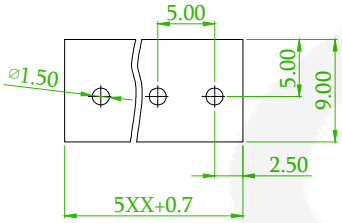

Recommended PCB Layout

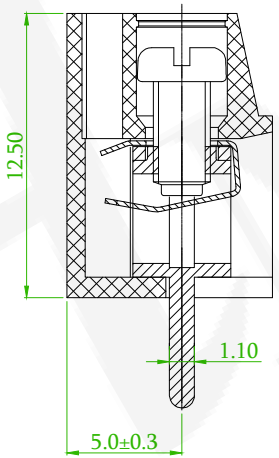

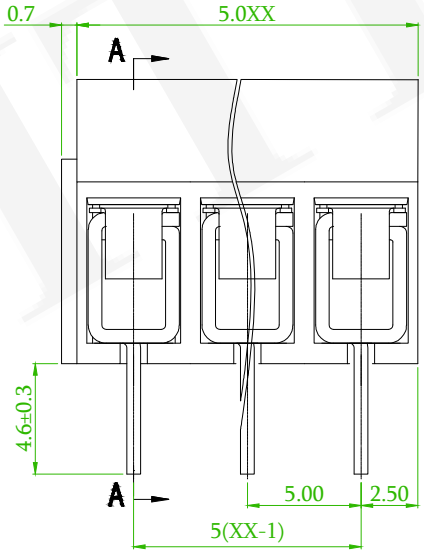

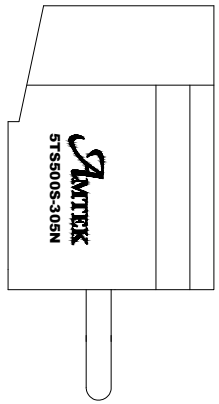

A

linear dimension(Tolerances Standard GB/T 14486-2008)								—	▱	⊥
variable range	to 6	over 6 to 10	over 10 to 30	over 30 to 60	over 60 to 100	over 100 to 160	over 160 to	to 10	over 10 to 100	over 100 to
tolerance	±0.20	±0.30	±0.50	±0.70	±1.00	±1.30	±1.60	0.10	0.30	0.60

REV.	ECN NO. OR DESCRIPTION	REVISED	DATE
A x1	Add the LOGO	David	2023/02/13
C x1	ECN NO:200718 Revise the Tolerance	Alice	2020/12/07
B x2	Add: U:Blue	David	2020/03/02

AMTEK
糧德精密有限公司
Amtek Technology Co., Ltd.
TEL: 886-2-2260-6878
FAX: 886-2-2260-8030

品名 TITLE	5.0mm Terminal Block			頁數 Page	1/1
品號 PART NO.	B 5TS500S-305NXXXLX-01			繪圖 DRAWN	Eric 2018/12/12
圖號 DRAWING NO.	GN011-EA264	版本 REV.	D	核對 CHECKED	Josh 2018/12/12
客戶品號 CUSTOMER P/N		比例 SCALE	None	承認 APPROVED	Jason 2018/12/12
公差 TOLERANCE		單位 UNIT	mm	THIRD ANGLE PROJECTION	