ELECTRICAL

	UL	IEC
Standard:	UL	IEC
Rated Voltage:	300V	750V
Rated Current:	52A	57A

Contact Resistance: 20mΩ
Insulation Resistance: 500MΩ / DC 500V
Wire Range: 20~6AWG 1.0mm²
Withstanding Voltage: AC 2000V for one min

MECHANICAL

Temp. Range: -40°C ~ +105°C
Soldering Max: +250°C 5s
Torque(Max): 1.2Nm(10.5Lb.in)
Strip Length: 10mm

DIMENSIONS

Pitch: 10.16mm
Poles: 2~24P

MATERIAL

Housing: PA66, UL94V-0
Screws: M4.0 Steel,Zn Plated
Pin Header: Brass,Tin plated

ORDER INFORMATION

5	T	S	1	0	1	S	-	1	1	6	N	X	X	X	L	B	-	0	1

- 101: Pitch 10.16mm
- Series No.
- No of Pins total
- B: E:Green / B:Black
- B:Bag

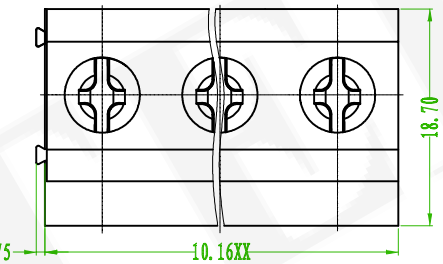

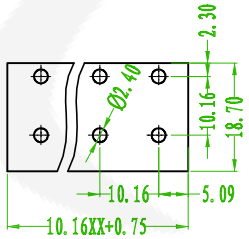

P.C.B. LAYOUT

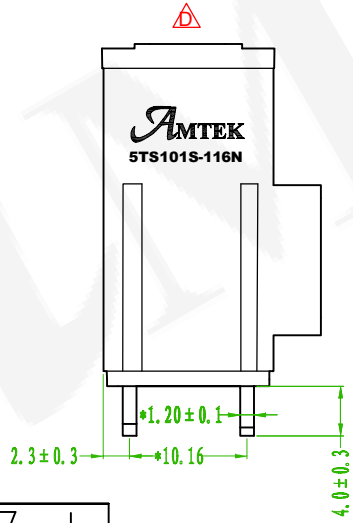

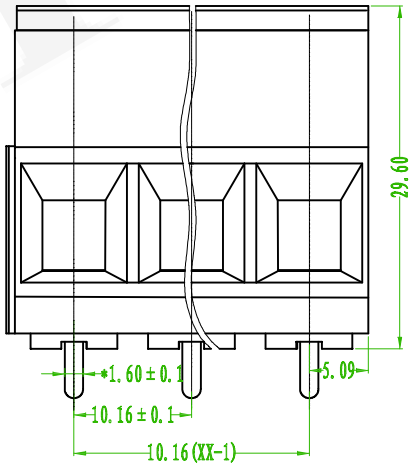

C

linear dimension(Tolerances Standard GB/T 14486-2008)								—	▱	⊥
variable range	to 6	over 6 to 10	over 10 to 30	over 30 to 60	over 60 to 100	over 100 to 160	over 160 to	to 10	over 10 to 100	over 100 to
tolerance	±0.20	±0.30	±0.50	±0.70	±1.00	±1.30	±1.60	0.10	0.30	0.60

REV.	ECN NO. OR DESCRIPTION	REVISED	DATE
D x1	ECN NO:210508 Add the LOGO	Benson	2021/05/20
C x1	ECN NO:200718 Revise the Tolerance	Alice	2020/12/04
B x1	Add: B:Black	David	2019/10/16

Old Part No.:TB116V-10.16-XXP-1X-00A-L

AMTEK
糧德精密有限公司
Amtek Technology Co., Ltd.
TEL: 886-2-2260-6878
FAX: 886-2-2260-8030

品名 TITLE	Terminal Block			頁數 Page	1/1
品號 PART NO.	5TS101S-116NXXXLB-01			繪圖 DRAWN	Eloise 2017/02/22
圖號 DRAWING NO.	GN011-EL289	版本 REV.	D	核對 CHECKED	Jonny 2017/02/22
客戶品號 CUSTOMER P/N		比例 SCALE	None	承認 APPROVED	Aaron 2017/02/22
公差 TOLERANCE		單位 UNIT	mm	THIRD ANGLE PROJECTION	

AMTEK糧德
2021.05.21
Released DCC