ELECTRICAL

	UL	IEC
Standard:	UL	IEC
Rated Voltage:	300V	1000V
Rated Current:	10A	21A

Contact Resistance: 20mΩ
Withstanding Voltage: AC 2000V for one min
Insulation Resistance: 500MΩ
Wire range: 28-12AWG 2.5mm²

MECHANICAL

Temp. Range: -40°C ~ +105°C
Steip length: 5-6mm

MATERIAL

Housing: PA66, UL94V-0
Pin header: Copper alloy, Sn plated
Shrapnel: Stainless steel

ORDER INFORMATION

5 T R 1 0 0 L - 4 T 3 N X X X L X - 0 1

- 4 T 3: Series No.
- X X: D No of Pins total (06～36P)
- X: G:Gray
- X: A:Tray / B:Bag
- E
- C

certified Pb RoHS Compliant

AMTEK糧德
2023.11.02
Released DCC

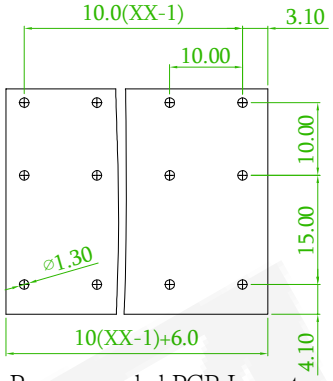

Recommended PCB Layout
(PCB TOLERANCE ±0.05)

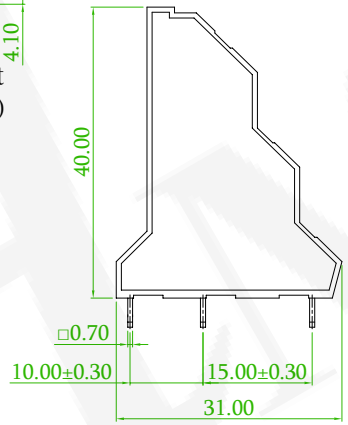

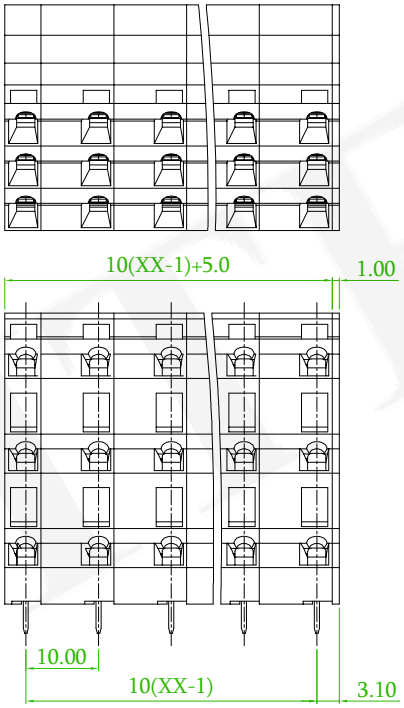

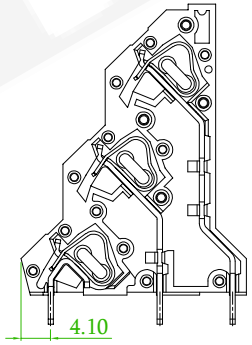

B

linear dimension(Tolerances Standard GB/T 14486-2008)								—	▱	⊥
variable range	to 6	over 6 to 10	over 10 to 30	over 30 to 60	over 60 to 100	over 100 to 160	over 160 to	to 10	over 10 to 100	over 100 to
tolerance	±0.20	±0.30	±0.50	±0.70	±1.00	±1.30	±1.60	0.10	0.30	0.60

REV.	ECN NO. OR DESCRIPTION	REVISED	DATE
E	ECN NO:230714 Revise the PART NO.	Randy	2023/09/23
D x1	ECN NO:220814 Revise the PART NO.	Tim	2022/09/16
C x2	ECN NO:201126 Revise the PART NO.	Alice	2020/12/11

AMTEK
糧德精密有限公司
Amtek Technology Co., Ltd.
TEL: 886-2-2260-6878
FAX: 886-2-2260-8030

品名 TITLE	10.0mm Terminal Block			頁數 Page	1/1
品號 PART NO.	C 5TR100L-4T3NXXXLX-01 E			繪圖 DRAWN	Eric 2018/12/26
圖號 DRAWING NO.	GN011-EA396	版本 REV.	E	核對 CHECKED	Josh 2018/12/26
客戶品號 CUSTOMER P/N		比例 SCALE	None	承認 APPROVED	Jason 2018/12/26
公差 TOLERANCE		單位 UNIT	mm	THIRD ANGLE PROJECTION	