## ORDER INFORMATION

| 5 | T | P | 7 | 6 | 2 | R | - | 3 | E | M | N | X | X | E | L | X | - | 0 | 1 |
|---|---|---|---|---|---|---|---|---|---|---|---|---|---|---|---|---|---|---|---|

- 3EM: Series No.
- XX: No. of Poles (02~24P)
- E: E:Green
- X: B:Bag / A:Tray

***Electrical***

| | UL | IEC |
|---|---|---|
| Standard: | UL | IEC |
| Rated Voltage: | 300V | 400V |
| Rated Current: | 30A | 32A |

Contact Resistance:20mΩ
Insulation Resistance: 500MΩ
Dielectric Voltage: AC 2000V for one minute
Temp. Range: -40°C ~ +105°C

***Material***

Housing:PA66, UL94V-0
Pin header: Copper alloy, Sn plated
Nut:Steel,Zn plated

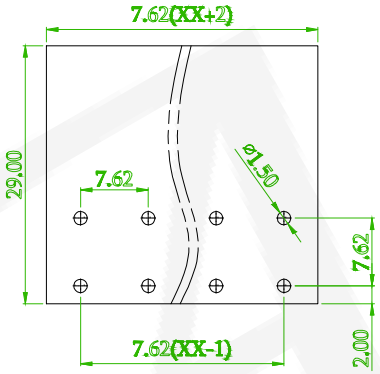


Recommended PCB Layout

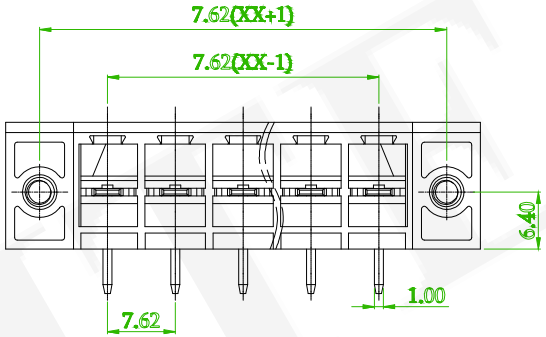


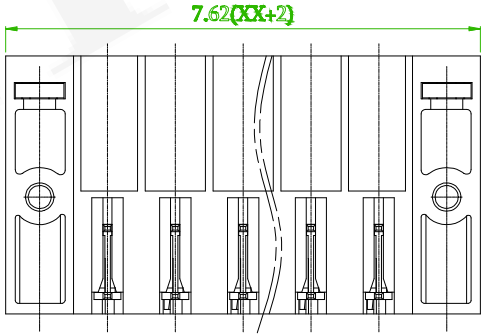


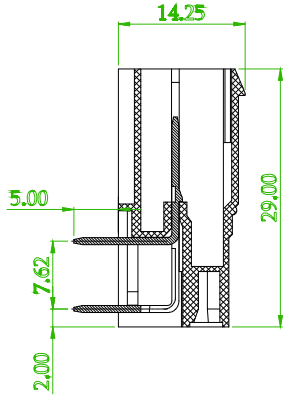


AMTEK糧德
2020.12.25
Released DCC

B

| linear dimension(Tolerances Standard GB/T 14486-2008) | | | | | | | | — | ⏥ | ⊥ |
|---|---|---|---|---|---|---|---|---|---|---|
| variable range | to 6 | over 6 to 10 | over 10 to 30 | over 30 to 60 | over 60 to 100 | over 100 to 160 | over 160 to | to 10 | over 10 to 100 | over 100 to |
| tolerance | ±0.20 | ±0.30 | ±0.50 | ±0.70 | ±1.00 | ±1.30 | ±1.60 | 0.10 | 0.30 | 0.60 |

| REV. | ECN NO. OR DESCRIPTION | REVISED | DATE |
|---|---|---|---|
| B x1 | ECN NO:200718 Revise the Tolerance | Alice | 2020/12/24 |


糧德精密有限公司
Amtek Technology Co., Ltd.
TEL: 886-2-2260-6878
FAX: 886-2-2260-8030


| | | | | | |
|---|---|---|---|---|---|
| 品名 TITLE | Terminal Block | | | 頁數 Page | 1/1 |
| 品號 PART NO. | 5TP762R-3EMNXXELX-01 | | | 繪圖 DRAWN | Eric 2018/12/11 |
| 圖號 DRAWING NO. | GN011-EA239 | 版本 REV. | B | 核對 CHECKED | Josh 2018/12/11 |
| 客戶品號 CUSTOMER P/N | | 比例 SCALE | None | 承認 APPROVED | Jason 2018/12/11 |
| 公差 TOLERANCE | | 單位 UNIT | mm | THIRD ANGLE PROJECTION | |