ELECTRICAL

	UL	IEC
Standard:	UL	IEC
Rated Voltage:	300V	450V
Rated Current:	10A	20A

Contact Resistance: 20mΩ
Withstanding Voltage: AC 2000V for one min
Insulation Resistance: 500MΩ
Wire range: 28-14AWG 2.5mm²

MECHANICAL

Temp. Range: -40°C ~ +105°C
Steip length: 7-8mm

MATERIAL

Housing: PA66, UL94V-0
Screws: M2.5 Steel, Zn plated
Clamp: Copper alloy, Sn plated
Wire guard: Stainless steel

ORDER INFORMATION

5 T P 5 0 8 N - 2 D B E X X E L X - 0 1

- 2DB: Series No.
- XX: Poles (02-24P)
- E: E:Green
- X: A:Tray / B:Bag

certified Pb RoHS Compliant

AMTEK糧德
2020.10.13
Released DCC

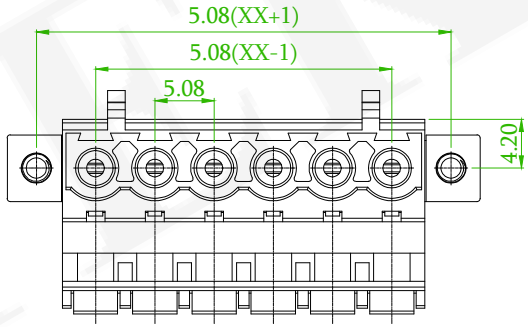

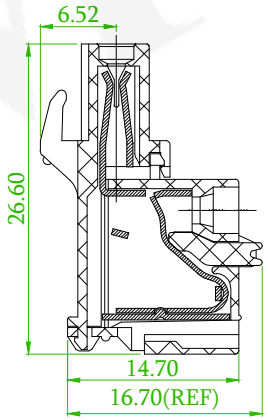

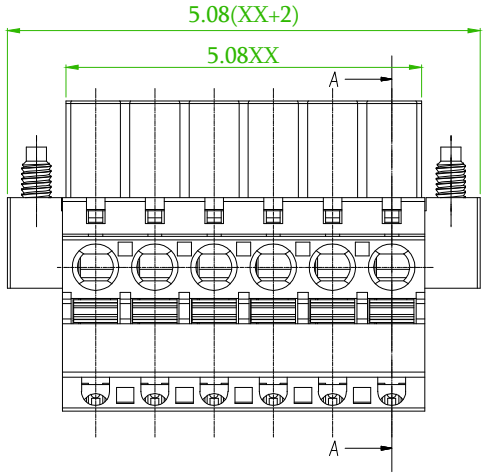

B

linear dimension(Tolerances Standard GB/T 14486-2008)								—	▱	⊥
variable range	to 6	over 6 to 10	over 10 to 30	over 30 to 60	over 60 to 100	over 100 to 160	over 160 to	to 10	over 10 to 100	over 100 to
tolerance	±0.20	±0.30	±0.50	±0.70	±1.00	±1.30	±1.60	0.10	0.30	0.60

REV.	ECN NO. OR DESCRIPTION	REVISED	DATE
B x1	ECN NO:200718 Revise the Tolerance	Alice	2020/09/18

糧德精密有限公司
Amtek Technology Co., Ltd.
TEL: 886-2-2260-6878
FAX: 886-2-2260-8030

品名 TITLE	5.08mm Terminal Block			頁數 Page	1/1
品號 PART NO.	5TP508N-2DBEXXELX-01			繪圖 DRAWN	Eric 2018/12/04
圖號 DRAWING NO.	GN011-EA170	版本 REV.	B	核對 CHECKED	Josh 2018/12/04
客戶品號 CUSTOMER P/N		比例 SCALE	None	承認 APPROVED	Jason 2018/12/04
公差 TOLERANCE		單位 UNIT	mm	THIRD ANGLE PROJECTION	