ELECTRICAL

Standard:	UL	IEC
Rated Voltage:	300V	450V
Rated Current:	15A	17.5A

Contact Resistance:20mΩ
Insulation Resistance:500MΩ
Dielectric Voltage: AC 2000V for one minute

MECHANICAL

Temp. Range: -40°C ~ +105°C

MATERIAL

Housing: Nylon 66, UL94V-0
Pin Header: Copper Alloy, Tin Plated

ORDER INFORMATION

5 T P 5 0 0 S - 2 V T N X X E L B - 0 1

- 500: Pitch5.00mm
- Series No.
- No of Pins total (02~24P)
- E:Green
- L:RoHS + Nylon 66

certified Pb RoHS Compliant

AMTEK糧德
2020.10.08
Released DCC

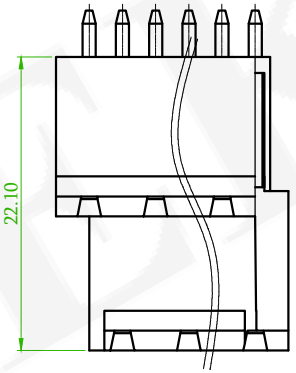

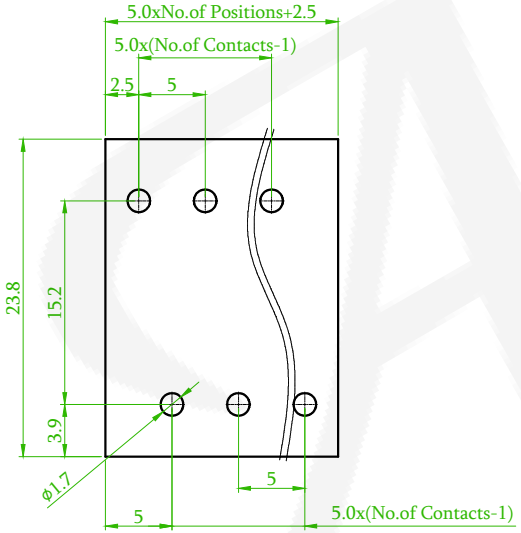

P.C.B. LAYOUT

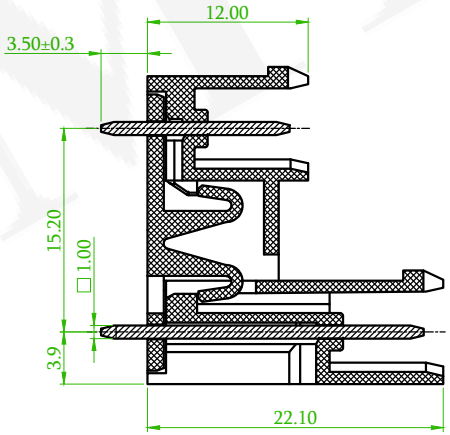

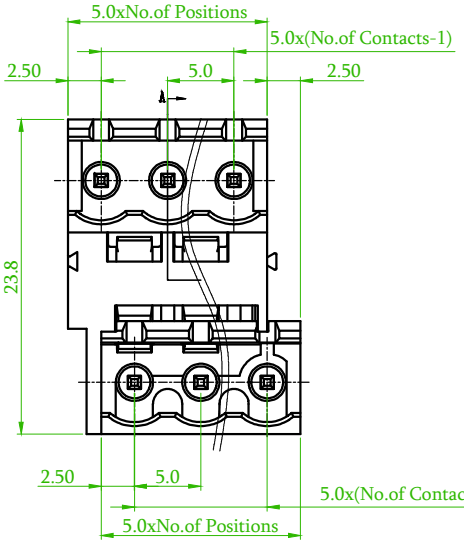

Old Part No. :TB2EVT-5.0-09P-14-00A-L

B

linear dimension(Tolerances Standard GB/T 14486-2008)								—	⏥	⊥
variable range	to 6	over 6 to 10	over 10 to 30	over 30 to 60	over 60 to 100	over 100 to 160	over 160 to	to 10	over 10 to 100	over 100 to
tolerance	±0.20	±0.30	±0.50	±0.70	±1.00	±1.30	±1.60	0.10	0.30	0.60

REV.	ECN NO. OR DESCRIPTION	REVISED	DATE
B x1	ECN NO:200718 Revise the Tolerance	Alice	2020/09/16

糧德精密有限公司
Amtek Technology Co., Ltd.
TEL: 886-2-2260-6878
FAX: 886-2-2260-8030

品名 TITLE	Terminal Block			頁數 Page	1/1
品號 PART NO.	5TP500S-2VTNXXELB-01			繪圖 DRAWN	Roy 2017/08/31
圖號 DRAWING NO.	GN011-RL966	版本 REV.	B	核對 CHECKED	Carol 2017/08/31
客戶品號 CUSTOMER P/N		比例 SCALE	None	承認 APPROVED	Jason 2017/08/31
公差 TOLERANCE	.X ±0.38 .XX ±0.25	單位 UNIT	mm	THIRD ANGLE PROJECTION	