## ELECTRICAL

| | UL | IEC |
|---|---|---|
| Standard: | UL | IEC |
| Rated Voltage: | 300V | 250V |
| Rated Current: | 8A | 10A |

Contact Resistance: 20mΩ
Withstanding Voltage: AC 2000V for one min
Insulation Resistance: 500MΩ

## MECHANICAL

Temp. Range: -40°C ~ +105°C

## MATERIAL

Housing: PA66, UL94V-0
Pin header: Brass, Tin plated
Nut: M2.5, Brass

# ORDER INFORMATION

5 T P 3 8 1 S - 5 D T E X X E L X - 0 1

- 5DT: Series No.
- XX: No of Pins total (04～48P) (C)
- E: E:Green
- X: A:Tray / B:Bag

certified Pb RoHS Compliant

AMTEK糧德
2022.09.30
Released DCC

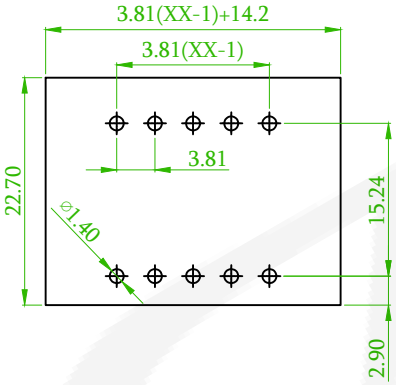


Recommended PCB Layout

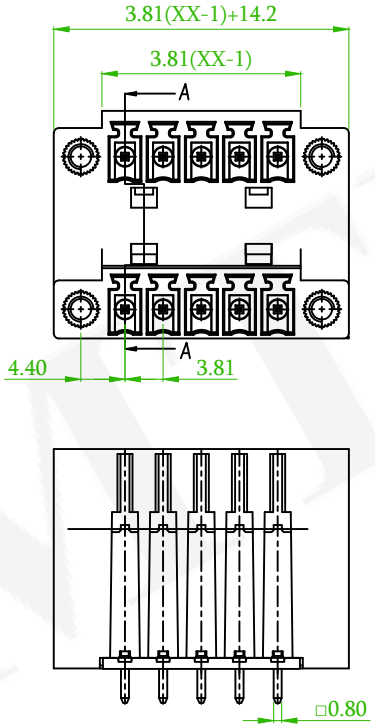


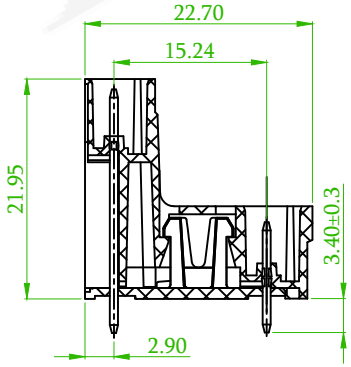


SECTION:A–A

(B)

| linear dimension(Tolerances Standard GB/T 14486–2008) | | | | | | | | — | ▱ | ⊥ |
|---|---|---|---|---|---|---|---|---|---|---|
| variable range | to 6 | over 6 to 10 | over 10 to 30 | over 30 to 60 | over 60 to 100 | over 100 to 160 | over 160 to | to 10 | over 10 to 100 | over 100 to |
| tolerance | ±0.20 | ±0.30 | ±0.50 | ±0.70 | ±1.00 | ±1.30 | ±1.60 | 0.10 | 0.30 | 0.60 |

| REV. | ECN NO. OR DESCRIPTION | REVISED | DATE |
|---|---|---|---|
| (C) x1 | ECN NO:220814 Revise the PART NO. | Tim | 2022/09/16 |
| (B) x1 | ECN NO:200718 Revise the Tolerance | Alice | 2020/09/10 |


AMTEK
糧德精密有限公司
Amtek Technology Co., Ltd.
TEL: 886-2-2260-6878
FAX: 886-2-2260-8030


| | | | | | |
|---|---|---|---|---|---|
| 品名 TITLE | 3.81mm Terminal Block | | | 頁數 Page | 1/1 |
| 品號 PART NO. | 5TP381S-5DTEXXELX-01 | | | 繪圖 DRAWN | Eric 2018/12/14 |
| 圖號 DRAWING NO. | GN011-EA295 | 版本 REV. | C | 核對 CHECKED | Josh 2018/12/14 |
| 客戶品號 CUSTOMER P/N | | 比例 SCALE | None | 承認 APPROVED | Jason 2018/12/14 |
| 公差 TOLERANCE | | 單位 UNIT | mm | THIRD ANGLE PROJECTION | |