Electrical

	UL	IEC
Standard:	UL	IEC
Rated Voltage:	300V	250V
Rated Current:	8A	10A

Contact Resistance: 20mΩ
Insulation Resistance: 500MΩ / DC 500V
With standing Voltage: AC 2000V for one min

Mechanical

Temp. Range: -40°C ~ +105°C
Max Soidering:+250°C for 5 Sec

Dimensions

Pitch:3.81mm
Poles:2-22P

Material

Housing:PA66, UL94V-0
Pin Header:Brass,Tin Plated

ORDER INFORMATION

5 T P 3 8 1 R - 5 E R E X X X L X - 0 1

- 381: Pitch 3.81mm
- Series No.
- No of Pins total (02~22)
- E:Green
- B:Bag

certified Pb RoHS Compliant

AMTEK糧德
2023.06.06
Released DCC

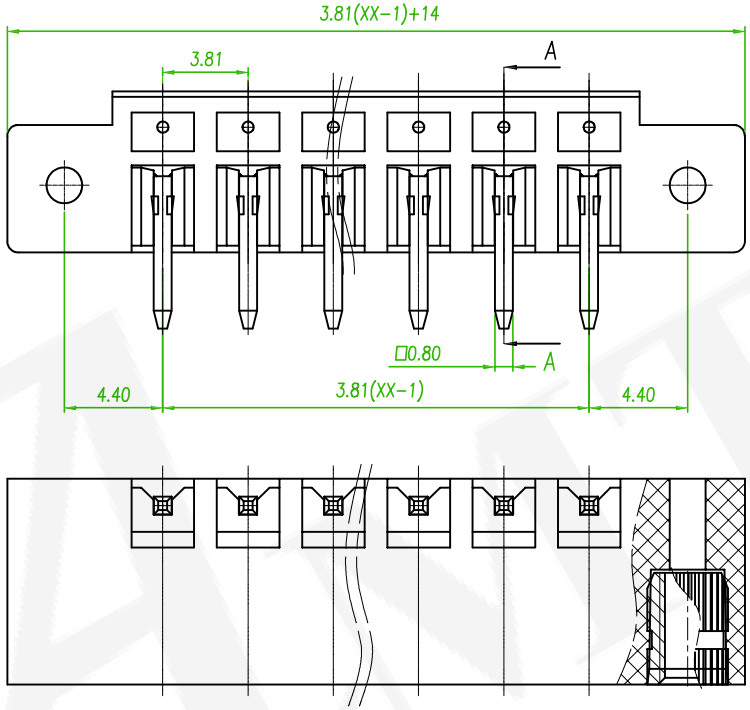

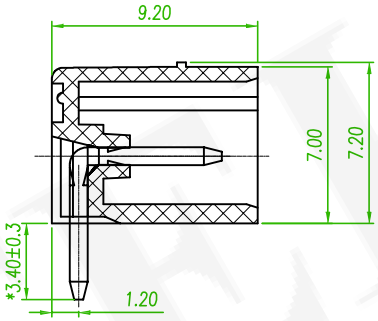

SECTION:A-A

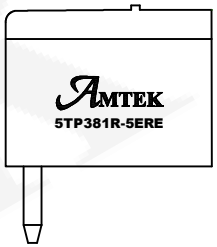

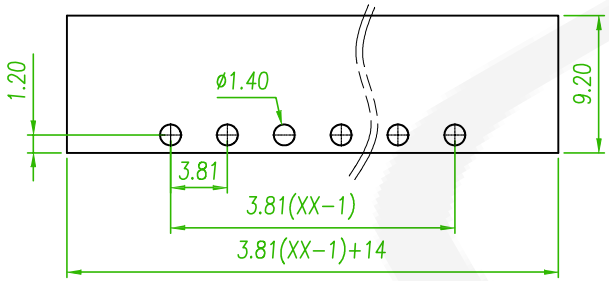

P.C.B. LAYOUT

B

linear dimension(Tolerances Standard GB/T 14486-2008)								—	▱	⊥
variable range	to 6	over 6 to 10	over 10 to 30	over 30 to 60	over 60 to 100	over 100 to 160	over 160 to	to 10	over 10 to 100	over 100 to
tolerance	±0.20	±0.30	±0.50	±0.70	±1.00	±1.30	±1.60	0.10	0.30	0.60

REV.	ECN NO. OR DESCRIPTION	REVISED	DATE
C x1	Add the Amtek Logo	Benson	2023/06/05
B x1	ECN NO:200718 Revise the Tolerance	Alice	2020/09/10

Old Part No. :**TB15ERM-3.81-XXP-1X-00A-L**

糧德精密有限公司
Amtek Technology Co., Ltd.
TEL: 886-2-2260-6878
FAX: 886-2-2260-8030

品名 TITLE	Terminal Block			頁數 Page	1/1
品號 PART NO.	5TP381R-5EREXXXLX-01			繪圖 DRAWN	Mia 2016/08/05
圖號 DRAWING NO.	GN011-AL343	版本 REV.	C	核對 CHECKED	Boris 2016/08/05
客戶品號 CUSTOMER P/N		比例 SCALE	None	承認 APPROVED	Boris 2016/08/05
公差 TOLERANCE		單位 UNIT	mm	THIRD ANGLE PROJECTION	