ELECTRICAL

Standard:	UL	IEC
Rated Voltage:	300V	250V
Rated Current:	8A	7A

Contact Resistance: 20mΩ
Insulation Resistance: 500MΩ / DC 500V
Withstanding Voltage: AC 2000V for one min

Mechanical

Temp. Range: -40°C ~ +105°C
Soldering Max:+250°C 5s

Material

Housing: PA66, UL94V-0
Clamp:Phosphor bronze,Tin plated

ORDER INFORMATION

B

5 T P 3 8 1 R - 5 E H N X X X L A - 0 1

- 5EH: Series No.
- XX: No of Pins total (04~48)
- X: B:Black / E:Green
- A: A:Tray

certified Pb RoHS Compliant

AMTEK糧德
2020.09.29
Released DCC

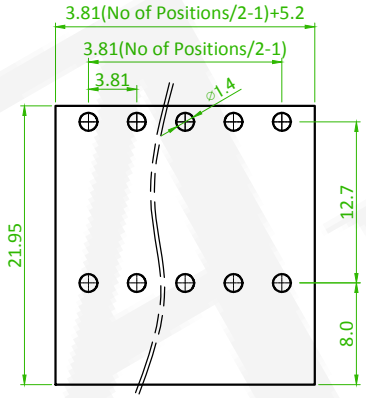

P.C.B. LAYOUT

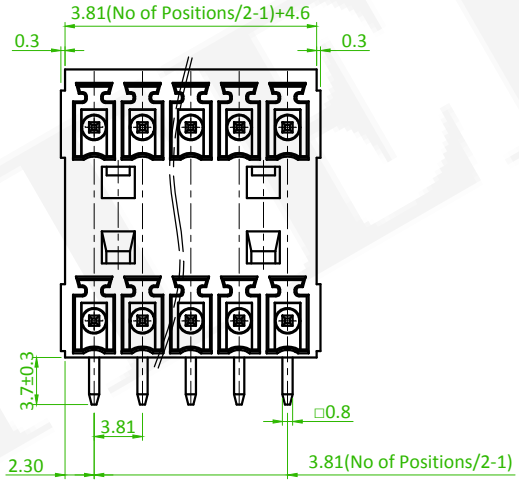

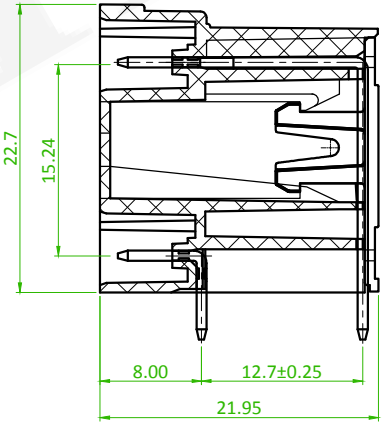

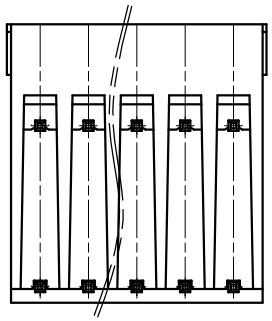

C

linear dimension(Tolerances Standard GB/T 14486-2008)								—	⫽	⊥
variable range	to 6	over 6 to 10	over 10 to 30	over 30 to 60	over 60 to 100	over 100 to 160	over 160 to	to 10	over 10 to 100	over 100 to
tolerance	±0.20	±0.30	±0.50	±0.70	±1.00	±1.30	±1.60	0.10	0.30	0.60

REV.	ECN NO. OR DESCRIPTION	REVISED	DATE
C x1	ECN NO:200718 Revise the Tolerance	Alice	2020/09/10
B x1	Add the E:Green	David	2020/05/14

AMTEK
糧德精密有限公司
Amtek Technology Co., Ltd.
TEL: 886-2-2260-6878
FAX: 886-2-2260-8030

品名 TITLE	3.81 Terminal Block			頁數 Page	1/1
品號 PART NO.	5TP381R-5EHNXXXLA-01			繪圖 DRAWN	Mia 2018/06/28
圖號 DRAWING NO.	GN011-MD247	版本 REV.	C	核對 CHECKED	Josh 2018/06/28
客戶品號 CUSTOMER P/N		比例 SCALE	None	承認 APPROVED	Jason 2018/06/28
公差 TOLERANCE		單位 UNIT	mm	THIRD ANGLE PROJECTION	