ELECTRICAL

	UL	IEC
Standard:	UL	IEC
Rated Voltage:	300V	450V
Rated Current:	15A	20A

Contact Resistance: 20mΩ
Withstanding Voltage: AC 2000V for one min
Insulation Resistance: 500MΩ

\MECHANICAL

Temp. Range: -40°C ~ +105°C

MATERIAL

Housing: PA66, UL94V-0
Pin header: Brass, Tin plated

ORDER INFORMATION

5 T M 5 0 0 S - W 0 1 N X X G L X - 0 1

- W01: Series No.
- XX: Poles (02-24P)
- G: G:Gray
- X: A:Tray / B:Bag

AMTEK糧德
2020.11.04
Released DCC

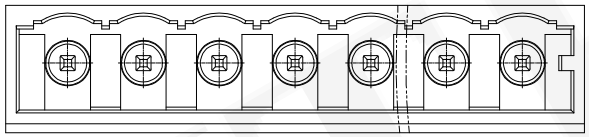

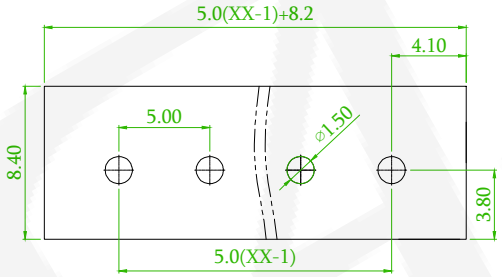

Recommended PCB Layout

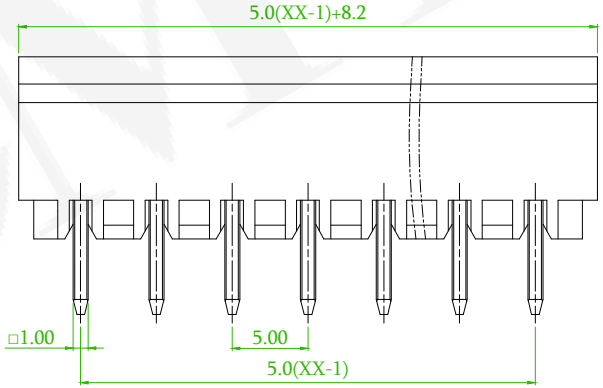

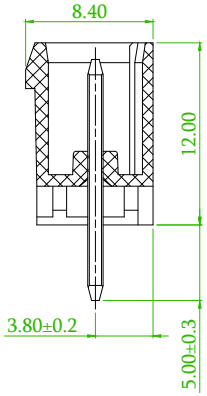

B

linear dimension(Tolerances Standard GB/T 14486-2008)								—	⏥	⊥
variable range	to 6	over 6 to 10	over 10 to 30	over 30 to 60	over 60 to 100	over 100 to 160	over 160 to	to 10	over 10 to 100	over 100 to
tolerance	±0.20	±0.30	±0.50	±0.70	±1.00	±1.30	±1.60	0.10	0.30	0.60

REV.	ECN NO. OR DESCRIPTION	REVISED	DATE
B x1	ECN NO:200718 Revise the Tolerance	Alice	2020/10/30

糧德精密有限公司
Amtek Technology Co., Ltd.
TEL: 886-2-2260-6878
FAX: 886-2-2260-8030

品名 TITLE	5.0mm Terminal Block			頁數 Page	1/1
品號 PART NO.	5TM500S-W01NXXGLX-01			繪圖 DRAWN	Eric 2019/01/03
圖號 DRAWING NO.	GN011-EA441	版本 REV.	B	核對 CHECKED	Josh 2019/01/03
客戶品號 CUSTOMER P/N		比例 SCALE	None	承認 APPROVED	Jason 2019/01/03
公差 TOLERANCE		單位 UNIT	mm	THIRD ANGLE PROJECTION	