ELECTRICAL B

Standard: UL
Rated Voltage: 300V
Rated Current: 15A
Contact Resistance: 20mΩ
Withstanding Voltage: AC 2000V for one min
Insulation Resistance: 500MΩ
Wire range: 22-14AWG 1.5mm²

MECHANICAL

Temp. Range: -40°C ~ +105°C
Torque: 0.5Nm

MATERIAL

Housing: PA66, UL94V-0
Screws: M3.0 Steel Ni plated
Pin header: Copper alloy, Tin plated
Cover: PC, UL94V-2

ORDER INFORMATION

D

5	T	B	7	6	2	R	-	2	8	R	E	X	X	B	L	X	-	W	1

- 28R: Series No.
- XX: Poles (02-24P)
- B: B:Black
- X: A:Tray / B:Bag

AMTEK糧德
2021.01.13
Released DCC

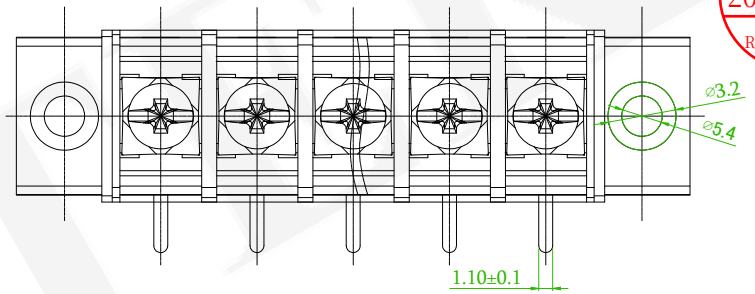

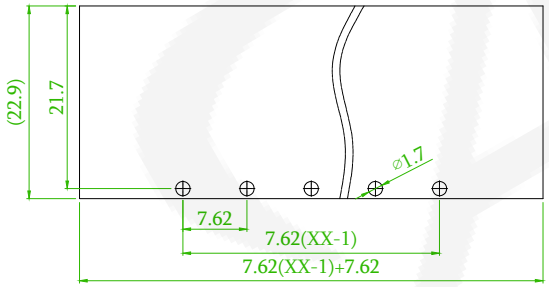

Recommended PCB Layout

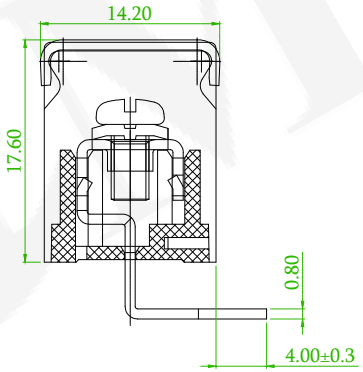

SECTION A-A

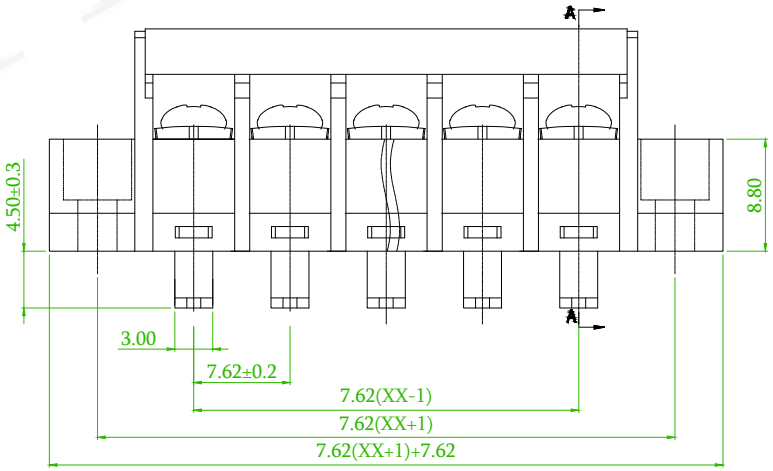

C

linear dimension(Tolerances Standard GB/T 14486-2008)								—	⏥	⊥
variable range	to 6	over 6 to 10	over 10 to 30	over 30 to 60	over 60 to 100	over 100 to 160	over 160 to	to 10	over 10 to 100	over 100 to
tolerance	±0.20	±0.30	±0.50	±0.70	±1.00	±1.30	±1.60	0.10	0.30	0.60

REV.	ECN NO. OR DESCRIPTION	REVISED	DATE
D x2	ECN NO:201211 Revise the PART NO	Alice	2021/01/04
C x1	ECN NO:200718 Revise the Tolerance	Alice	2020/11/11
B x1	ECN 200102: Remove the IEC	David	2020/06/06

AMTEK
糧德精密有限公司
Amtek Technology Co., Ltd.
TEL: 886-2-2260-6878
FAX: 886-2-2260-8030

品名 TITLE	7.62mm Terminal Block			頁數 Page	1/1
品號 PART NO.	D 5TB762R-28REXXBLX-W1			繪圖 DRAWN	Eric 2019/01/10
圖號 DRAWING NO.	GN011-EA540	版本 REV.	D	核對 CHECKED	Josh 2019/01/10
客戶品號 CUSTOMER P/N		比例 SCALE	None	承認 APPROVED	Jason 2019/01/10
公差 TOLERANCE		單位 UNIT	mm	THIRD ANGLE PROJECTION	