ELECTRICAL B

Standard: UL
Rated Voltage: 300V
Rated Current: 20A
Contact Resistance: 20mΩ
Withstanding Voltage: AC 2000V for one min
Insulation Resistance: 500MΩ
Wire range: 22-12AWG 2.5mm²

MECHANICAL

Temp. Range: -40°C ~ +105°C
Torque: 1.2Nm

MATERIAL

Housing: PA66, UL94V-0
Screws: M4.0 Steel Ni plated
Pin header: Copper alloy, Tin plated

ORDER INFORMATION

D

5	T	B	1	0	0	R	-	5	8	R	E	X	X	B	L	X	-	W	1

- 5 8 R: Series No.
- X X: Poles (02-24P)
- B: B:Black
- X: A:Tray / B:Bag

certified Pb RoHS Compliant

AMTEK糧德
2021.01.13
Released DCC

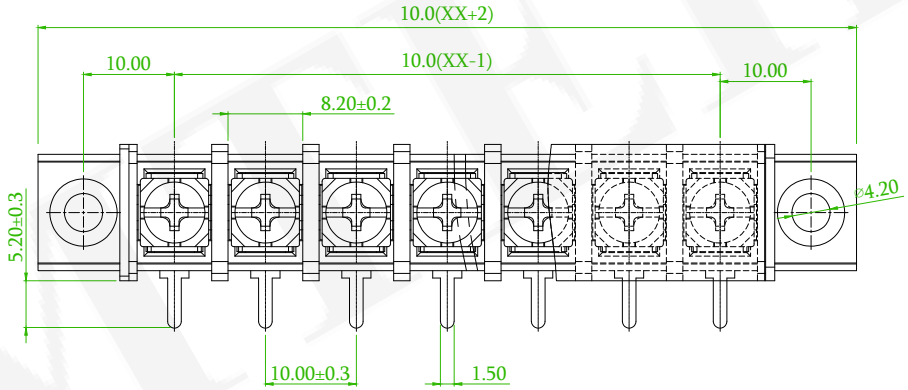

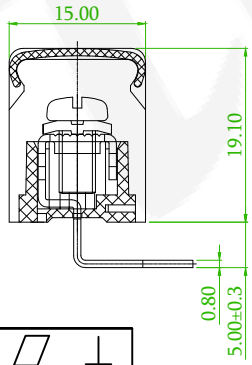

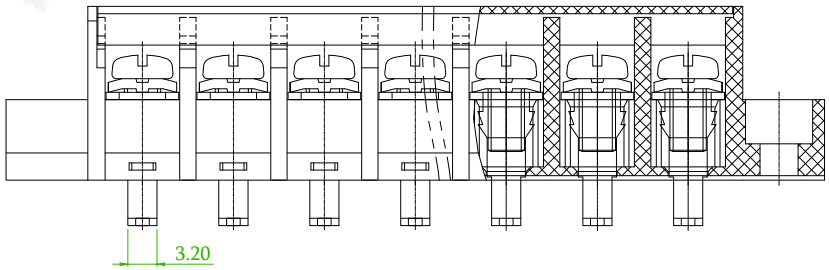

C

linear dimension(Tolerances Standard GB/T 14486-2008)								—	▱	⊥
variable range	to 6	over 6 to 10	over 10 to 30	over 30 to 60	over 60 to 100	over 100 to 160	over 160 to	to 10	over 10 to 100	over 100 to
tolerance	±0.20	±0.30	±0.50	±0.70	±1.00	±1.30	±1.60	0.10	0.30	0.60

REV.	ECN NO. OR DESCRIPTION	REVISED	DATE
Dx2	ECN NO:201211 Revise the PART NO.	Alice	2020/12/31
Cx1	ECN NO:200718 Revise the Tolerance	Alice	2020/11/06
Bx1	ECN 200102: Remove the IEC	David	2020/03/21

AMTEK
糧德精密有限公司
Amtek Technology Co., Ltd.
TEL: 886-2-2260-6878
FAX: 886-2-2260-8030

品名 TITLE	10.0mm Terminal Block			頁數 Page	1/1
品號 PART NO.	D 5TB100R-58REXXBLX-W1			繪圖 DRAWN	Eric 2019/01/11
圖號 DRAWING NO.	GN011-EA561	版本 REV.	D	核對 CHECKED	Josh 2019/01/11
客戶品號 CUSTOMER P/N		比例 SCALE	None	承認 APPROVED	Jason 2019/01/11
公差 TOLERANCE		單位 UNIT	mm	THIRD ANGLE PROJECTION	